# CATALOGUE

目录

## The Development Speed Of Maarket

## 市场的发展速度

速度的发展，在于人的力量。
是前进的燃油产生灵感。是强劲的引擎创新策路，
是把握的方向严谨模式，是发展的基础。
综合动力理善于在崎岖的道路上比赛。

The speedy development lies in the power of people. Lt is the inspiration of the advancing oil, the innovative strategy of powerful engine, the strict mode in grasping direction, and the foundation for development, The comprehensive motive force enables us to compete on the cragged road more easily.


01 20槽欧标内开内倒示意图
02 20槽欧标内平开下悬示意图
04 E款双皮条内开内倒
05 20槽欧标内平开下悬示意图
06 20槽欧标铝木内平开下悬示意图
07 20槽欧标内平开下悬示意图
14 20槽隐形式内开内倒示意图
15 外开下悬四连杆
16 外开下悬铰链式
17 外开下悬五金件(方轴式)
18 20槽外开外倒示意图
19 漂移内倒侧滑五金示意图
20 双飞翼五金系统
21 幕墙系列
23 塑钢内平开内倒系列
24 铝木内平开内倒13系列
25 执手系列
35 外平开窗执手系列
38 方钢执手
46 金钢网纱窗配件系列
47 转角器
48 组合连接件系列
55 铝合金内外开节能微通风系统
56 铝合金内开两点锁系列
58 铝合金防盗锁两点锁系列
59 铝合金双向内开两点锁系列
60 铝合金内开天地锁系列
61 铝合金内开多点锁系列
62 铝合金内开两点锁系列
63 铝合金内开天地锁系列
64 铝条式两点锁内开系列
65 铝合金外开两点锁系列
67 铝条式两点锁外开系列
69 铝条式幕墙两点锁系列
70 铝条式两点锁外开系列
71 铝合金两点锁系列
72 欧标槽双外开金钢网系列
73 方钢式两点锁系列
75 外内开金钢网一体配件
76 双内开金钢网一体配件
77 防火窗内开配件
79 铝杆系列
81 平开门锁系列
91 锁芯系列
93 门锁扣板系列
94 锁体系列
98 锁盒系列
103 月牙锁系列
105 各种锁勾
106 合页系列
115 插销系列
116 风撑系列
118 隐形铰链系列
123 滑撑系列防
127 坠落器系列
129 推拉钩锁系列
133 滑轮系列
134 角码系列
135 传动器系列
137 塑钢合页系列
138 角部铰链系列
139 智能开窗器系列




# SCHEMATIC DIAGRAM OF 20 EU HORIZONTAL PIVOTING WINDOW

JS-ND01 20槽欧标内开内倒示意图 /125. 第一代 First Generation .

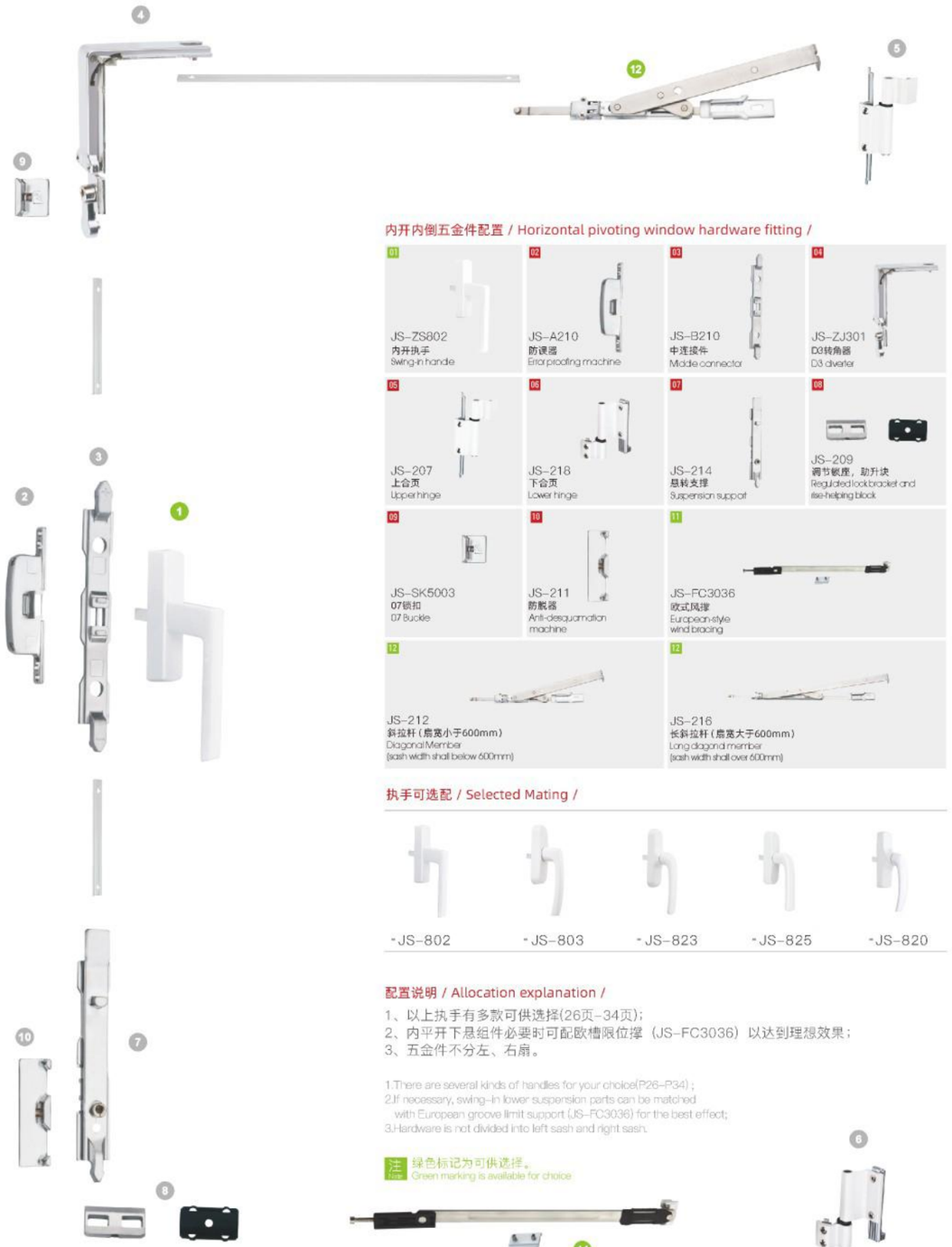


内开内倒五金件配置 / Horizontal pivoting window hardware fitting /

| | | | |
|---|---|---|---|
| 01 JS-ZS802 内开执手 Swing-in handle | 02 JS-A210 防误器 Error proofing machine | 03 JS-B210 中连接件 Middle connector | 04 JS-ZJ301 D3转角器 D3 diverter |
| 05 JS-207 上合页 Upper hinge | 06 JS-218 下合页 Lower hinge | 07 JS-214 悬转支撑 Suspension support | 08 JS-209 调节锁座，助升块 Regulated lock bracket and rise-helping block |
| 09 JS-SK5003 07锁扣 07 Buckle | 10 JS-211 防脱器 Anti-desquamation machine | 11 JS-FC3036 欧式风撑 European-style wind bracing | |
| 12 JS-212 斜拉杆（扇宽小于600mm） Diagonal Member (sash width shall below 600mm) | 12 JS-216 长斜拉杆（扇宽大于600mm） Long diagonal member (sash width shall over 600mm) | | |

执手可选配 / Selected Mating /



- JS-802 - JS-803 - JS-823 - JS-825 - JS-820

配置说明 / Allocation explanation /

1、以上执手有多款可供选择(26页-34页)；
2、内平开下悬组件必要时可配欧槽限位撑（JS-FC3036）以达到理想效果；
3、五金件不分左、右扇。

1.There are several kinds of handles for your choice(P26-P34) ;
2.If necessary, swing-in lower suspension parts can be matched with European groove limit support (JS-FC3036) for the best effect;
3.Hardware is not divided into left sash and right sash.

注 Note 绿色标记为可供选择。
Green marking is available for choice



# SCHEMATIC DIAGRAM FOR 20-GROOVED EU INWARD OPENING BOTTOM SUSPENSION WINDOW

JS-ND03 20槽欧标内平开下悬示意图 /125 . 第三代 Third Generation




内平开下悬五金件配置 / Tilting and turning sash opening inward hardware fitting /

| | | | |
|---|---|---|---|
| 01 JS-ZS803 内开执手 Swing-in handle | 02 JS-ZJ301 D3转角器 D3 diverter | 03 JS-204 转向器 Redirector | 04 JS-207 上合页 Upper hinge |
| 05 JS-208 下合页 Lower hinge | 06 JS-201 悬转支撑 Suspension support | 07 JS-231 调节锁座，助升块 Regulated lock bracket and rise-helping block | 08 JS-SK5003 07锁扣 07Buckle |
| 09 JS-201202 防脱器 Anti-desquamation machine | 10 JS-212 斜拉杆（扇宽小于600mm） Diagonal Member (sash width shall below 600mm) | 10 JS-216 长斜拉杆（扇宽大于600mm） Long diagonal member (sash width shall over 600mm) | 11 JS-FC3036 欧式风撑 European-style wind bracing |

执手可选配 / Selected Mating /



- JS-803 - JS-804 - JS-813 - JS-823 - JS-816

配置说明 / Allocation explanation /

1、以上执手有多款可供选择(26页-34页)；
2、内平开下悬组件必要时可配欧槽限位撑（JS-FC3036）以达到理想效果；
3、五金件不分左、右扇。

1.There are several kinds of handles for your choice(P26-P34) ;
2.If necessary, swing-in lower suspension parts can be matched with European groove limit support (JS-FC3036) for the best effect;
3.Hardware is not divided into left sash and right sash.

注 Note 绿色标记为可供选择。
Green marking is available for choice

# SCHEMATIC DIAGRAM FOR 20-GROOVED EU INWARD OPENING BOTTOM SUSPENSION WINDOW

JS-ND04 20槽欧标内平开下悬示意图 /165 ，大型门窗实用 。




内平开下悬五金件配置 / Tilting and turning sash opening inward hardware fitting /

| | | | |
|---|---|---|---|
| 01 JS-ZS816 内开执手 Swing-in handle | 02 JS-210 防误器 Error proofing machine | 03 JS-ZJ302 窗帘转角器 Curtain diverter | 04 JS-5748 上合页 Upper hinge |
| 05 JS-229 下合页 Lower hinge | 06 JS-DK2001 滚轮助升器 Roller lifting booster | 07 JS-SK5003 07锁扣 07 Buckle | 08 JS-201202 防脱器 Anti-desquamation machine |
| 09 JS-ZJ307 内倒后备锁 Roller lifting booster | 10 JS-ZJ307 内倒后备锁 Roller lifting booster | 11 JS-LJ2006 多点连接件 Multi-point connection part | 12 JS-224 斜拉杆H Diagonal member H |

执手可选配 / Selected Mating /

-JS-ZS816 -JS-ZS802 -JS-ZS801 -JS-ZS821 -JS-ZS806

配置说明 / Allocation explanation /

1、以上执手有多款可供选择(26页-34页)；
2、内平开下悬组件必要时可配欧槽限位撑（JS-FC3036）以达到理想效果；
3、五金件不分左、右扇。

1.There are several kinds of handles for your choice(P26-P34) ;
2.If necessary, swing-in lower suspension parts can be matched with European groove limit support (JS-FC3036) for the best effect;
3.Hardware is not divided into left sash and right sash.

注 Note 绿色标记为可供选择。
Green marking is available for choice



# E STYLE DOUBLE LEATHER LACE HORIZONTAL PIVOTING WINDOW

JS-ND05 E款双皮条内开内倒 / 125

**(合页搭接量12cm)**

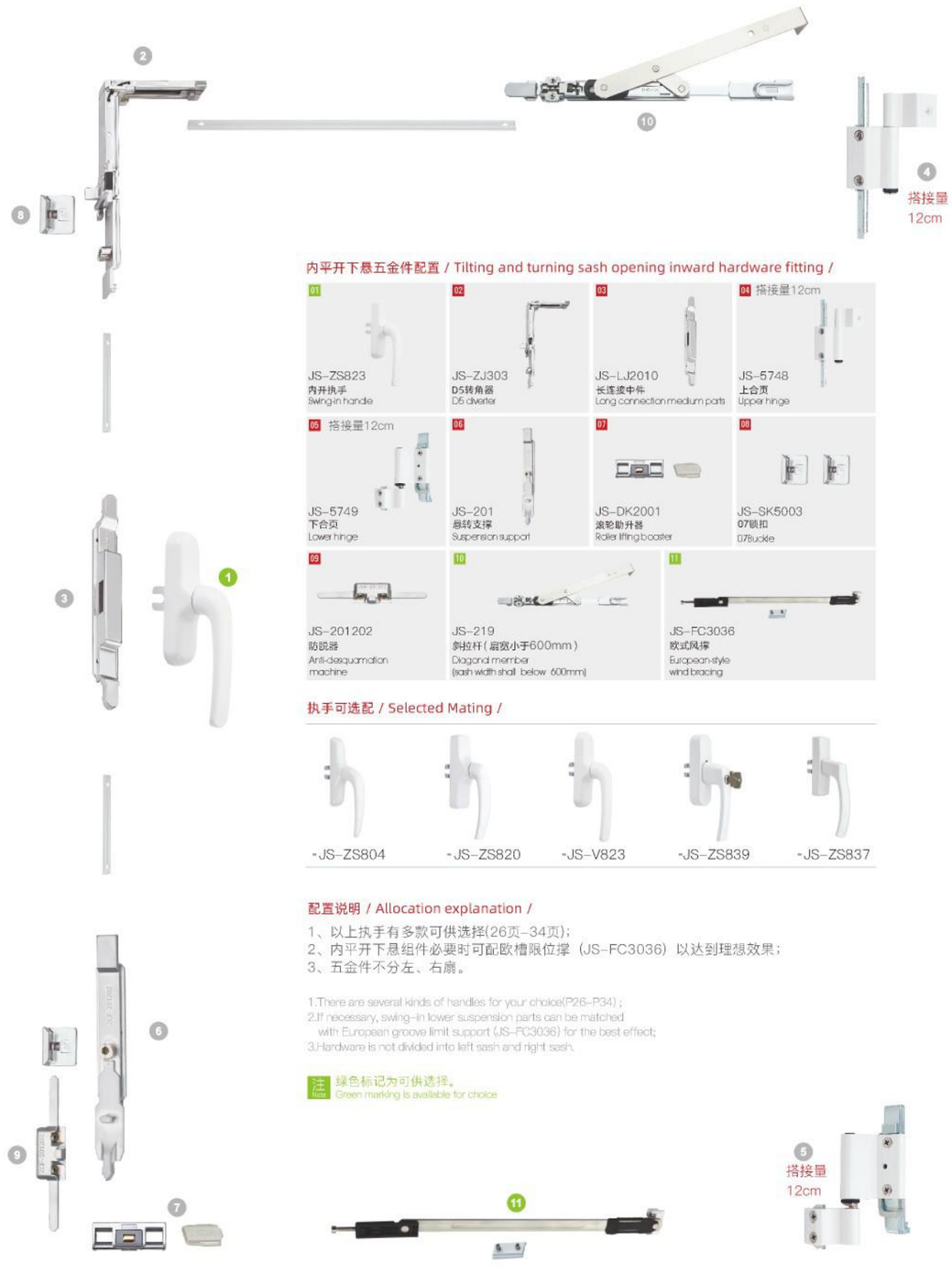


内平开下悬五金件配置 / Tilting and turning sash opening inward hardware fitting /

| | | | |
|---|---|---|---|
| 01 JS-ZS823 内开执手 Swing-in handle | 02 JS-ZJ303 D5转角器 D5 diverter | 03 JS-LJ2010 长连接中件 Long connection medium parts | 04 搭接量12cm JS-5748 上合页 Upper hinge |
| 05 搭接量12cm JS-5749 下合页 Lower hinge | 06 JS-201 悬转支撑 Suspension support | 07 JS-DK2001 滚轮助升器 Roller lifting booster | 08 JS-SK5003 07锁扣 07Buckle |
| 09 JS-201202 防脱器 Anti-desquamation machine | 10 JS-219 斜拉杆（扇宽小于600mm） Diagonal member (sash width shall below 600mm) | 11 JS-FC3036 欧式风撑 European-style wind bracing | |

执手可选配 / Selected Mating /

-JS-ZS804 -JS-ZS820 -JS-V823 -JS-ZS839 -JS-ZS837

配置说明 / Allocation explanation /

1、以上执手有多款可供选择(26页-34页)；
2、内平开下悬组件必要时可配欧槽限位撑（JS-FC3036）以达到理想效果；
3、五金件不分左、右扇。

1.There are several kinds of handles for your choice(P26-P34) ;
2.If necessary, swing-in lower suspension parts can be matched with European groove limit support (JS-FC3036) for the best effect;
3.Hardware is not divided into left sash and right sash.

注 Note 绿色标记为可供选择。
Green marking is available for choice

# SCHEMATIC DIAGRAM OF 20 REBATE EUROPEAN STANDARD TILTING AND TURNING SASH OPENING INWARD

JS-ND08 20槽欧标内平开下悬示意图 喷塑130/氧化160

（重型合页） Heavy hinge




内平开下悬五金件配置 / Tilting and turning sash opening inward hardware fitting /

| | | | |
|---|---|---|---|
| 01  JS-ZS829 内开执手 Swing-in handle | 02  JS-ZJ304 D8转角器 D8 diverter | 03  JS-LJ2012 内开D中连接件 Inward opening D middle connection part | 04  JS-5748 上合页H Upper hinge H |
| 05  JS-5749 调节下合页 Lower hinge | 06  JS-221 防脱器H Anti-desquamation machine H | 07  JS-SK5003 07锁扣 07 Buckle | 08  JS-222 悬转支撑H Suspension support H |
| 09  JS-DK2001 滚轮助升器 Roller lifting booster | 10  JS-FC3039 伸缩风撑 Telescopic wind bracing | 11  JS-224 斜拉杆H Diagonal member H | |

配置说明 / Allocation explanation /

1、以上执手有多款可供选择(26页-34页)；
2、内平开下悬组件必要时可配欧槽限位撑（JS-FC3039）以达到理想效果；
3、五金件不分左、右扇。

1.There are several kinds of handles for your choice(P26-P34)；
2.If necessary, swing-in lower suspension parts can be matched with European groove limit support (JS-FC3039) for the best effect;
3.Hardware is not divided into left sash and right sash.

注 绿色标记为可供选择。
Note Green marking is available for choice



# 20-GROOVE EUROPEAN STANDARD ALUMINUM-WOOD TILTING AND TURNING SASH OPENING INWARD SCHEMATIC DIAGRAM

JS-ND09 20槽欧标铝木内平开下悬示意图 喷塑130/氧化160




内平开下悬五金件配置 / Tilting and turning sash opening inward hardware fitting /

| | | | |
|---|---|---|---|
| 01  JS-ZS835 弓形指纹执手(内开) Bow-shaped fingerprint handle (internal open) 喷塑17/氧化36 | 02  JS-ZJ304 D8转角器 D8 diverter | 03  JS-LJ2012 内开D中连接件 Inward opening D middle connection part | 04  JS-5750 铝木上合页 Aluminum-wood upper hinge |
| 05  JS-5751 铝木下合页 Aluminum-wood lower hinge | 06  JS-224 铝木防脱器 Anti-desquamation machine | 07  JS-SK5004 欧标铝木锁扣 European standard aluminum-wood lock catch | 08  JS-222 悬转支撑H Suspension support H |
| 09  JS-DK2007 铝木助升器 Aluminum-wood lifting booster | 10  JS-FC3039 伸缩风撑 Telescopic wind bracing | 11  JS-219 斜拉杆（扇宽小于600mm） Diagonal member (sash width shall below 600mm) | |

配置说明 / Allocation explanation /

1、以上执手有多款可供选择(26页-34页)；
2、内平开下悬组件必要时可配欧槽限位撑（JS-FC3039）以达到理想效果；
3、五金件不分左、右扇。

1. There are several kinds of handles for your choice(P26-P34)；
2. If necessary, swing-in lower suspension parts can be matched with European groove limit support (JS-FC3039) for the best effect;
3. Hardware is not divided into left sash and right sash.

注 绿色标记为可供选择。
Note Green marking is available for choice

# 20 REBATE EUROPEAN STANDARD TILTING AND TURNING SASH OPENING INWARD SCHEMATIC DIAGRAM

ND227 20槽欧标内平开下悬示意图 /180 ，大型门窗实用 Practical large doors and windows

T450隐藏内开内倒（防撬款）
T450 invisible horizontal pivoting window (anti-prying style)



内平开下悬五金件配置 / Tilting and turning sash opening inward hardware fitting /

| | | | |
|---|---|---|---|
| 01 JS-SG8043 奔驰方钢执手 Benz square steel handle | 02 JS-SH1027 锁盒60° Lock box 180° | 03 JS-LJ2012 内开D中连接件 Inward opening D middle connection part | 04 JS-ZJ305 防撬转角器 Anti-prying diverter |
| 05 JS-SK304 防撬锁扣 Anti-prying lock catch | 06 JS-SK304 防误碰块 Anti-touch block | 07 JS-ZJ307 内倒后备锁 Horizontal pivoting window backup lock | 08 JS-LJ2006 多点连接件 Multi-point connection part |
| 09 JS-SK5002 01新锁扣 01 New Buckle | 10 JS-DK2001 滚轮助升器 Roller lifting booster | 11 JS-221 防脱器 Fallout preventer | 12 JS-CK304 防撬插杆 Anti-prying inserting rod |
| 13 JS-ND227 定位块 Positioning block | 14 JS-ND227 隐藏铰链 Invisible hinge | 15 JS-ND227 斜拉杆 Diagonal member | |

执手可选配 / Selected Mating /



- JS-SG8043 - JS-SG8048 - JS-SG8068 - JS-SG8069 - JS-SG8047

配置说明 / Allocation explanation /

1、以上执手有多款可供选择(26页-45页)；
2、内平开下悬组件必要时可配欧槽限位撑（JS-FC3039）以达到理想效果；
3、五金件分左、右扇，90/180°。

1. There are several kinds of handles for your choice(P26-P45)；
2. If necessary, swing-in lower suspension parts can be matched with European groove limit support (JS-FC3039) for the best effect;
3. Hardware is divided into left sash and right sash, 90/180°

注 Note 绿色标记为可供选择。
Green marking is available for choice





# 20 REBATE EUROPEAN STANDARD TILTING AND TURNING SASH OPENING INWARD SCHEMATIC DIAGRAM

ND228 20槽欧标内平开下悬示意图 /180

T450隐藏内开内倒（斜边款）
T450 invisible horizontal pivoting window (bevel edge style)



内平开下悬五金件配置 / Tilting and turning sash opening inward hardware fitting /

| | | | |
|---|---|---|---|
| 01 JS-SG8047 幻影方钢执手 Vision square handle | 02 JS-SH1025 锁盒180° Lock box 180° | 03 JS-LJ2012 内开D中连接件 Inward opening D middle connection part | 04 JS-ZJ306 调节转角器 Adjusting diverter |
| 05 JS-ZJ307 内倒后备锁 Horizontal pivoting window backup lock | 06 JS-LJ2001 边连接件 Edge connection part | 07 JS-SK5003 07锁扣 07 Buckle | 08 JS-221B 防脱器 Fallout preventer |
| 09 JS-CX222B 调节支撑 Adjusting support | 10 JS-DK2001 滚轮助升器 Roller lifting booster | 11 JS-ND229 定位块 Positioning seat | 12 JS-ND229 隐藏铰链 Invisible hinge |
| 13 JS-ND229 斜拉杆 Diagonal member | | | |

执手可选配 / Selected Mating /



- JS-SG8043 - JS-SG8047 - JS-SG8017 - JS-SG8020 - JS-SG8041

配置说明 / Allocation explanation /

1、以上执手有多款可供选择(26-35页)；
2、内平开下悬组件必要时可配欧槽限位撑（JS-FC3039）以达到理想效果；
3、五金件分左、右扇，90/180°。

1. There are several kinds of handles for your choice(P26-P45)；
2. If necessary, swing-in lower suspension parts can be matched with European groove limit support (JS-FC3039) for the best effect;
3. Hardware is divided into left sash and right sash, 90/180°

注 Note 绿色标记为可供选择。
Green marking is available for choice

# 20 REBATE EUROPEAN STANDARD TILTING AND TURNING SASH OPENING INWARD SCHEMATIC DIAGRAM

## ND227 20槽欧标内平开下悬示意图 /150

T350隐藏内开内倒（短斜拉杆）
T350 invisible horizontal pivoting window (short bevel pull rod)




内平开下悬五金件配置 / Tilting and turning sash opening inward hardware fitting /

| 01 | 02 | 03 | 04 |
|---|---|---|---|
| JS-ZS855<br>985E内开执手<br>985E inward opening handle | JS-LJ2012<br>内开D中连接件<br>Inward opening D middle connection part | JS-ZJ306<br>调节转角器<br>Adjusting diverter | JS-221B<br>防脱器<br>Fallout preventer |
| 05 | 06 | 07 | 08 |
| JS-222B<br>调节支撑<br>Adjusting support | JS-DK2001<br>调节锁座<br>Regulated lock bracket | JS-ND227<br>定位块<br>Positioning block | JS-ND227<br>隐藏铰链<br>Invisible hinge |
| 09 | | 09 | |
| JS-ND600<br>加长斜拉杆<br>Diagonal member | | JS-ND350<br>斜拉杆<br>Diagonal member | |

执手可选配 / Selected Mating /



- JS-ZS849 - JS-ZS851 - JS-ZS853 - JS-ZS829 - JS-ZS828

配置说明 / Allocation explanation /

1、以上执手有多款可供选择(26页-34页)；
2、内平开下悬组件必要时可配欧槽限位撑（JS-FC3039）以达到理想效果；
3、五金件分左、右扇，90/180°。

1. There are several kinds of handles for your choice(P26-P34) ;
2. If necessary, swing-in lower suspension parts can be matched with European groove limit support (JS-FC3039) for the best effect;
3. Hardware is not divided into left sash and right sash, 90/180°

注 绿色标记为可供选择。
Note Green marking is available for choice



# 20 REBATE EUROPEAN STANDARD TILTING AND TURNING SASH OPENING INWARD SCHEMATIC DIAGRAM

## ND229 20槽欧标内平开下悬示意图 /170

T480隐藏内开内倒（通用款）
T480 invisible horizontal pivoting window (universal style)

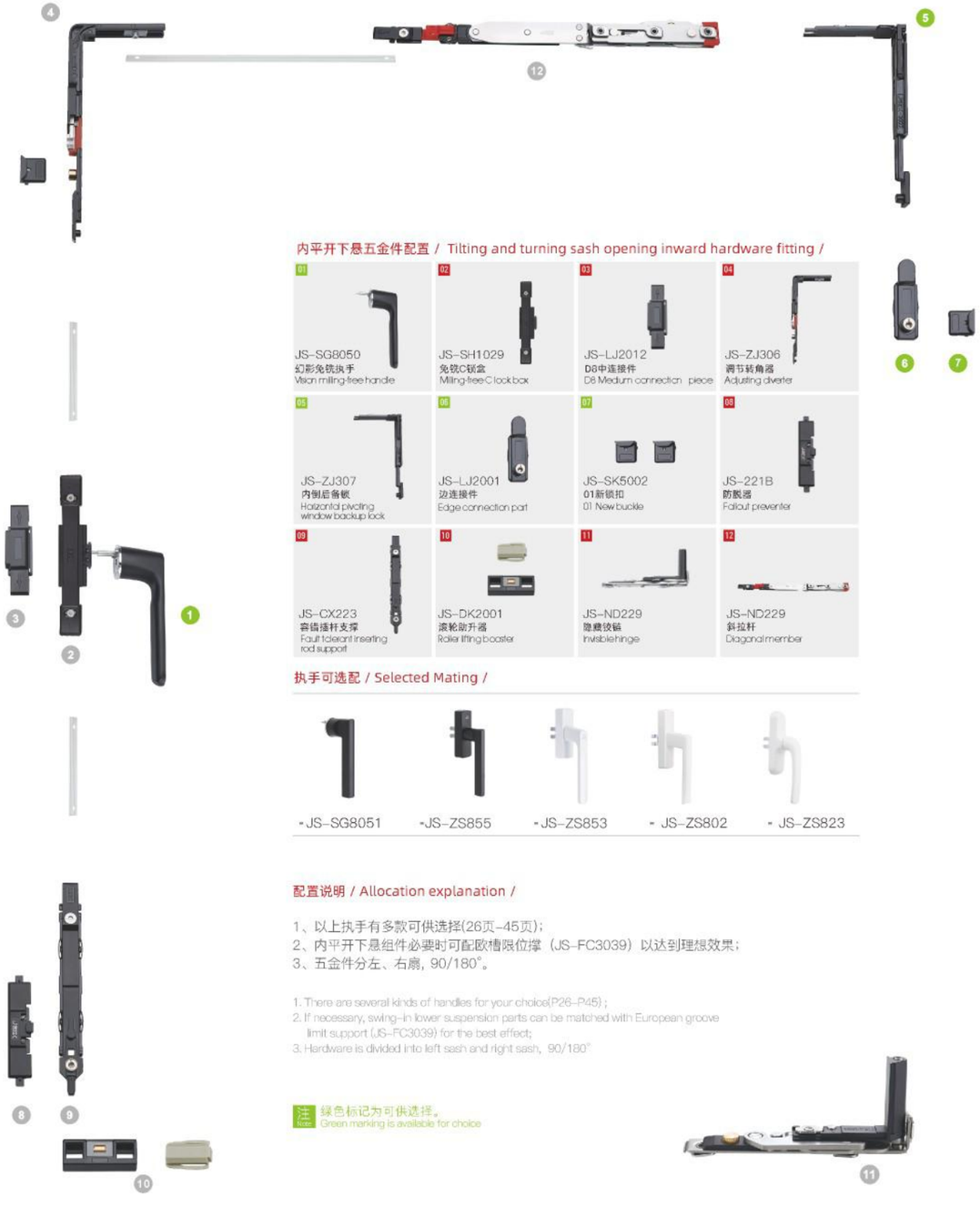


内平开下悬五金件配置 / Tilting and turning sash opening inward hardware fitting /

| 01 | 02 | 03 | 04 |
|---|---|---|---|
| JS-SG8050<br>幻影免铣执手<br>Vision milling-free handle | JS-SH1029<br>免铣C锁盒<br>Milling-free C lock box | JS-LJ2012<br>D8中连接件<br>D8 Medium connection piece | JS-ZJ306<br>调节转角器<br>Adjusting diverter |
| 05 | 06 | 07 | 08 |
| JS-ZJ307<br>内倒后备锁<br>Horizontal pivoting window backup lock | JS-LJ2001<br>边连接件<br>Edge connection part | JS-SK5002<br>01新锁扣<br>01 New buckle | JS-221B<br>防脱器<br>Fallout preventer |
| 09 | 10 | 11 | 12 |
| JS-CX223<br>容错插杆支撑<br>Fault tolerant inserting rod support | JS-DK2001<br>滚轮助升器<br>Roller lifting booster | JS-ND229<br>隐藏铰链<br>Invisible hinge | JS-ND229<br>斜拉杆<br>Diagonal member |

执手可选配 / Selected Mating /



- JS-SG8051 - JS-ZS855 - JS-ZS853 - JS-ZS802 - JS-ZS823

配置说明 / Allocation explanation /

1、以上执手有多款可供选择(26页-45页)；
2、内平开下悬组件必要时可配欧槽限位撑（JS-FC3039）以达到理想效果；
3、五金件分左、右扇，90/180°。

1. There are several kinds of handles for your choice(P26-P45) ;
2. If necessary, swing-in lower suspension parts can be matched with European groove limit support (JS-FC3039) for the best effect;
3. Hardware is divided into left sash and right sash, 90/180°

注 绿色标记为可供选择。
Note Green marking is available for choice

# 20 REBATE EUROPEAN STANDARD TILTING AND TURNING SASH OPENING INWARD SCHEMATIC DIAGRAM

JS-ND14 20槽欧标内平开下悬示意图 /150

T470隐藏内开内倒（标准款）
T470 invisible horizontal pivoting window (standard style)



内平开下悬五金件配置 / Tilting and turning sash opening inward hardware fitting /

| | | | |
|---|---|---|---|
| 01 JS-ZS851 奔驰E内开执手 Benz E inward opening handle | 01 JS-SH1025 锁盒180° Lock box 180° | 02 JS-ZJ306 调节转角器 Adjusting diverter | 03 JS-LJ2012 D8中连接件 D8 Medium connection piece |
| 04 JS-221B 防脱器 Fallout preventer | 05 JS-CX222B 调节支撑 Adjusting support | 06 JS-DK2009 科能垫块 Keneng cushion block | 07 JS-ND470 下铰链 Lower hinge |
| 08 JS-ND470 斜拉杆 Diagonal member | | | |

执手可选配 / Selected Mating /



- JS-ZS849 -JS-ZS851 - JS-ZS853 - JS-ZS813 - JS-ZS855

配置说明 / Allocation explanation /

1、以上执手有多款可供选择(26页-34页)；
2、内平开下悬组件必要时可配欧槽限位撑（JS-FC3039）以达到理想效果；
3、五金件分左、右扇，90/180°。

1. There are several kinds of handles for your choice(P26-P34) ;
2. If necessary, swing-in lower suspension parts can be matched with European groove limit support (JS-FC3039) for the best effect;
3. Hardware is divided into left sash and right sash, 90/180°

注 Note 绿色标记为可供选择。
Green marking is available for choice



# 23 REBATE EUROPEAN STANDARD TILTING AND TURNING SASH OPENING INWARD SCHEMATIC DIAGRAM

ND227 23槽欧标内平开下悬示意图 /180

T450隐藏内开内倒（23槽款）
T450 invisible horizontal pivoting window (23 rebate style)



内平开下悬五金件配置 / Tilting and turning sash opening inward hardware fitting /

| | | | |
|---|---|---|---|
| 01 JS-SG8047 幻影方钢执手 Vision square handle | 02 JS-SH1025 锁盒180° Lock box 80° | 03 JS-ZJ306 调节转角器 Adjusting diverter | 04 JS-SK23 K槽锁扣 K rebate lock catch |
| 05 JS-SK23B 防脱扣 Fallout preventer | 06 JS-CX222B 调节支撑 Adjusting support | 07 JS-DK2077 槽助升器 Rebate lifting booster | 08 JS-ND227 90定位块 90 positioning block |
| 09 JS-ND227 下铰链K槽 Lower hinge K rebate | 10 JS-ND227 斜拉杆K槽 Bevel pull rod K rebate | | |

执手可选配 / Selected Mating /



- JS-SG8043 -JS-SG8048 - JS-SG8047 - JS-SG8017 - JS-SG8041

配置说明 / Allocation explanation /

1、以上执手有多款可供选择(37页-45页)；
2、内平开下悬组件必要时可配欧槽限位撑（JS-FC3039）以达到理想效果；
3、五金件分左、右扇，90/180°。

1. There are several kinds of handles for your choice(P37-P45) ;
2. If necessary, swing-in lower suspension parts can be matched with European groove limit support (JS-FC3039) for the best effect;
3. Hardware is divided into left sash and right sash, 90/180°

注 Note 绿色标记为可供选择。
Green marking is available for choice

# 20 REBATE EUROPEAN STANDARD TILTING AND TURNING SASH OPENING INWARD SCHEMATIC DIAGRAM

JS-ND16 20槽欧标内平开下悬示意图 /170

T400隐藏内开内倒 / 90°分左右（标准款）

T400 invisible horizontal pivoting window / 90° including left and right parts (standard style)




## 内平开下悬五金件配置 / Tilting and turning sash opening inward hardware fitting /

| | | | |
|---|---|---|---|
| 01 JS-SH1025 锁盒 C13 Lock box C13 | 02 JS-SG8053 秒针无基座执手 Second hand base-free handle | 03 JS-ZJ306 调节转角器 Adjusting diverter | 04 JS-DK2005 内倒连接垫块 Horizontal pivoting window connection cushion block |
| 05 JS-CX222 调转支撑 Adjusting support | 06 JS-DK2011 防开块 lifting boarder | 07 JS-ZJ307 内倒后备锁 Horizontal pivoting window backup lock | 08 JS-LJ2001 边连接件 Edge connection part |
| 09 JS-SK5002 01锁扣 01Buckle | 10 JS-CP574 下铰链座座定位 Lower hinge socket positioning | 11 JS-LJ5741 下铰链90座 Lower hinge 90 seat | 12 JS-LG2266 隐形斜拉杆(90°) Invisible bevel pull rod (90°) |

## 执手可选配 / Selected Mating /



- JS-SG8049 -JS-SG8052 - JS-SG8040 - JS-SG8036 - JS-SG8037

## 配置说明 / Allocation explanation /

1、以上执手有多款可供选择(38页-45页)；
2、内平开下悬组件必要时可配欧槽限位撑（JS-FC3039）以达到理想效果；
3、五金件分左、右扇，90/180°。

1.There are several kinds of handles for your choice(P38-P45)；
2.If necessary, swing-in lower suspension parts can be matched with European groove limit support (JS-FC3039) for the best effect;
3.Hardware is divided into left sash and right sash, 90/180°

注 绿色标记为可供选择。
Note Green marking is available for choice



# SCHEMATIC DIAGRAM FOR 20-GROOVED HIDDEN TILT-TURN WINDOW

JS-ND17 20槽隐形式内开内倒示意图 / 90°分左右 不配执手165/锁盒180

90° including left and right parts




## 隐形式内开内倒五金件配置 / Hidden tilt-turn window hardware fitting /

| | | | |
|---|---|---|---|
| 01 JS-ZS841 内开执手 Swing-in handle | 02 JS-ZJ303 D5转角器 D5 diverter | 03 JS-LJ2010 长中连接 Long-medium connection piece | 04 JS-5741 隐形下合页 Concealed lower hinge |
| 05 JS-201 悬转支撑 Suspension support | 06 JS-LJ223 调节锁座H Regulated lock bracket H | 07 JS-SK5003 07锁扣 07Buckle | 08 JS-201202 防脱器 Fall out preventer |
| 09 JS-226 隐形斜拉杆（扇宽小于600mm） (sash width shall below 600mm) | | | |

## 执手可选配 / Selected Mating /



- JS-ZS841 - JS-ZS840 - JS-ZS835 - JS-ZS834 - JS-ZS829

## 配置说明 / Allocation explanation /

1、以上执手有多款可供选择(26页-34页)；
2、内平开下悬组件必要时可配欧槽限位撑（JS-FC3039）以达到理想效果；
3、五金件分左、右扇，90°。

1.There are several kinds of handles for your choice(P26-P34)；
2.If necessary, swing-in lower suspension parts can be matched with European groove limit support (JS-FC3039) for the best effect;
3.Hardware is divided into left sash and right sash, 90°

注 绿色标记为可供选择。
Note Green marking is available for choice

# BOTTOM-HUNG CASEMENT OPENING OUTWARD FOUR CONNECTION RODS

JS-YD101 外开下悬四连杆 320





外开下悬五金件配置 / Tilting and turning sash opening outwards hardware fitting /

| | | | |
|---|---|---|---|
| 01  JS-SH1035 不锈钢锁盒 Stainless steel lock box | 01  JS-LJ2015 外开T钉中件 Outward opening T-nail middle part | 02  JS-YK2109 定位座 Positioning seat | 03  JS-SK5002 01新锁扣 01 New buckle |
| 04  JS-DK223 垫块 Cushion block | 05  JS-YK2108 防误器 Error preventer | 06  JS-YK2011 旋转支撑 Rotary support | 07  JS-ZJ306 调节转角器 Adjusting diverter |
| 08  JS-YK1044 上四连杆铰链 Upper four connection rods hinge | 09  JS-YK1055 顶座 Top seat | 10  JS-FZ904 20槽口防坠器(不分左右) 20 rebate fall preventer (without difference between left and right) | 11  JS-YK7711 圆拉手 Round handle |
| 12  JS-YK2177 下四连杆铰链 Lower four connection rods hinge | | | |





执手可选配 / Selected Mating /



- JS-SG8043 -JS-SG8048 - JS-SG8068 - JS-SG8069 - JS-SG8047

配置说明 / Allocation explanation /

1、以上执手有多款可供选择(38页-45页);
2、外开下悬组件;
3、五金件分左、右扇，90°。

1.There are several kinds of handles for your choice(P38-P45);
2.If necessary, swing-out lower suspension parts;
3.Hardware is divided into left sash and right sash, 90°

注 绿色标记为可供选择。
Note Green marking is available for choice









# BOTTOM-HUNG CASEMENT OPENING OUTWARD HINGE STYLE

JS-YD102 外开下悬铰链式 /320





外开下悬五金件配置 / Tilting and turning sash opening outwards hardware fitting /

| | | | |
|---|---|---|---|
| 01  JS-SH1035 不锈钢锁盒 Stainless steel lock box | 01  JS-LJ2015 外开T钉中件 Outward opening T-nail middle part | 02  JS-YK2109 定位座 Positioning seat | 03  JS-SK5002 01新锁扣 01 New buckle |
| 04  JS-DK223 垫块 Cushion block | 05  JS-YK2108 防误器 Error preventer | 06  JS-YK2011 旋转支撑 Rotary support | 07  JS-ZJ306 调节转角器 Adjusting diverter |
| 08  JS-YK104 外开下悬上铰链 Top hinge for outward-swinging tilt windows | 09  JS-FZ904 20槽口防坠器（不分左右） 20 rebate fall preventer (without difference between left and right) | 10  JS-YK217 下悬下斜拉杆 Bottom-hung window lower bevel push rod | |





执手可选配 / Selected Mating /



- JS-SG8029 - JS-SG8030 - JS-ZS836 - JS-ZS853 - JS-ZS852

配置说明 / Allocation explanation /

1、以上执手有多款可供选择(38页-45页);
2、外开下悬组件必要时可配欧槽限位撑（JS-FC3039）以达到理想效果;
3、五金件分左、右扇，90°。

1.There are several kinds of handles for your choice(P38-P45);
2.If necessary, swing-out lower suspension parts can be matched with European groove limit support (JS-FC3039) for the best effect;
3.Hardware is divided into left sash and right sash, 90°

注 绿色标记为可供选择。
Note Green marking is available for choice





# BOTTOM-HUNG CASEMENT OPENING OUTWARDS HARDWARE (SQUARE SHAFT TYPE)

JS-YD104 外开下悬五金件（方轴式） 喷塑250/氧化270 ，第二代 Second Generation ，(分左右 Left and right)

拨叉配置：103 ，锁盒配置：104 Shifting fork configuration: 103 ，Lock box configuration: 104







外开下悬五金件配置 / Tilting and turning sash opening inward hardware fitting /

| | | | | |
|---|---|---|---|---|
| 01 JS-SG8030 好式A执手 Handle A | 02 JS-25 锁盒(可选) Lock box(optional) | 02 JS-30 锁盒防误器 Error proofing machine | 03 JS-LJ2015 外开T钉中件 Outward opening T nail middle part | 04 JS-FC3039 伸缩风撑(可选) Telescopic wind bracing (optional) |
| 05 JS-223 调节锁座H Regulated lock bracket H | 06 JS-2108 防误器 Error preventer | 07 JS-2011D 旋转支撑 Rotary support | 08 JS-2109 定位座 Positioning seat | 09 JS-SK5003 07锁扣 07Buckle |
| 10 JS-ZJ302 幕墙转角器 Curtain diverter | 11 JS-104 外开下悬上合页 Upper hinge of bottom-hung casement opening outwards | 12 JS-103 外开下悬下合页 Lower hinge of bottom-hung casement opening outwards | 13 JS-FZ901 欧标槽坠落器 Europe grooved anti-falling device | 14 JS-771 小拉手 Small handle |
| 15 JS-217 下悬斜拉杆 Bottom-hung diagonal Member | | | | |

执手可选配 / Selected Mating /



- JS-SG8017 - JS-SG8029 -JS-SG8030 - JS-ZS836 - JS-ZS851

配置说明 / Allocation explanation /

1、以上执手有多款可供选择；
2、外开下悬组件必要时可配欧槽限位撑（JS-FC3039）以达到理想效果；
3、五金件不分左、右扇。

1.There are several kinds of handles for your choice;
2.If necessary, swing-out lower suspension parts can be matched with European groove limit support (JS-FC3039) for the best effect;
3.Hardware is not divided into left sash and right sash.

注 Note 绿色标记为可供选择。 Green marking is available for choice





# SCHEMATIC DIAGRAM FOR 20-GROOVED EXTERNAL AWAY DOWN WINDOW (PATENT PRODUCT)

JS-YD105 20槽外开外倒示意图(专利产品) 喷塑140/氧化160 ，第一代 First Generation ，





外开外倒五金件配置 / Tilting and turning sash opening outward hardware fitting /

| | | | |
|---|---|---|---|
| 01 JS-ZS817 外开执手 Handle | 01 JS-25 外开执手 Handle | 02 JS-LJ2015 外开T钉中件 Outward opening T nail middle part | 03 JS-ZJJ303 D5转角器 D5 diverter |
| 04 JS-ND229 隐藏铰链 Invisible hinge | 05 JS-201 悬转支撑 Suspension support | 06 JS-231 调节锁座，助升块 Regulated lock bracket and rise-helping block | 07 JS-SK5003 07锁扣 07Buckle |
| 08 JS-201202 防脱器 Anti-desquamation machine | 09 JS-FC3039 伸缩风撑 Telescopic wind bracing | 10 JS-ND229 斜拉杆 Diagonal member | |

执手可选配 / Selected Mating /



- JS-ZS817 - JS-ZS833 - JS-ZS836 - JS-ZS831 - JS-ZS843

配置说明 / Allocation explanation /

1、以上执手有多款可供选择；
2、外开下悬组件必要时可配欧槽限位撑（JS-FC3039）以达到理想效果；
3、五金件分左、右扇，90/180°。

1.There are several kinds of handles for your choice;
2.If necessary, swing-out lower suspension parts can be matched with European groove limit support (JS-FC3039) for the best effect;
3.Hardware is divided into left sash and right sash, 90/180°

注 Note 绿色标记为可供选择。 Green marking is available for choice





# DRIFTING HORIZONTAL PIVOTING WINDOW LATERAL SLIDING HARDWARE SCHEMATIC DIAGRAM

JS-PY80 漂移内倒侧滑五金示意图 /550

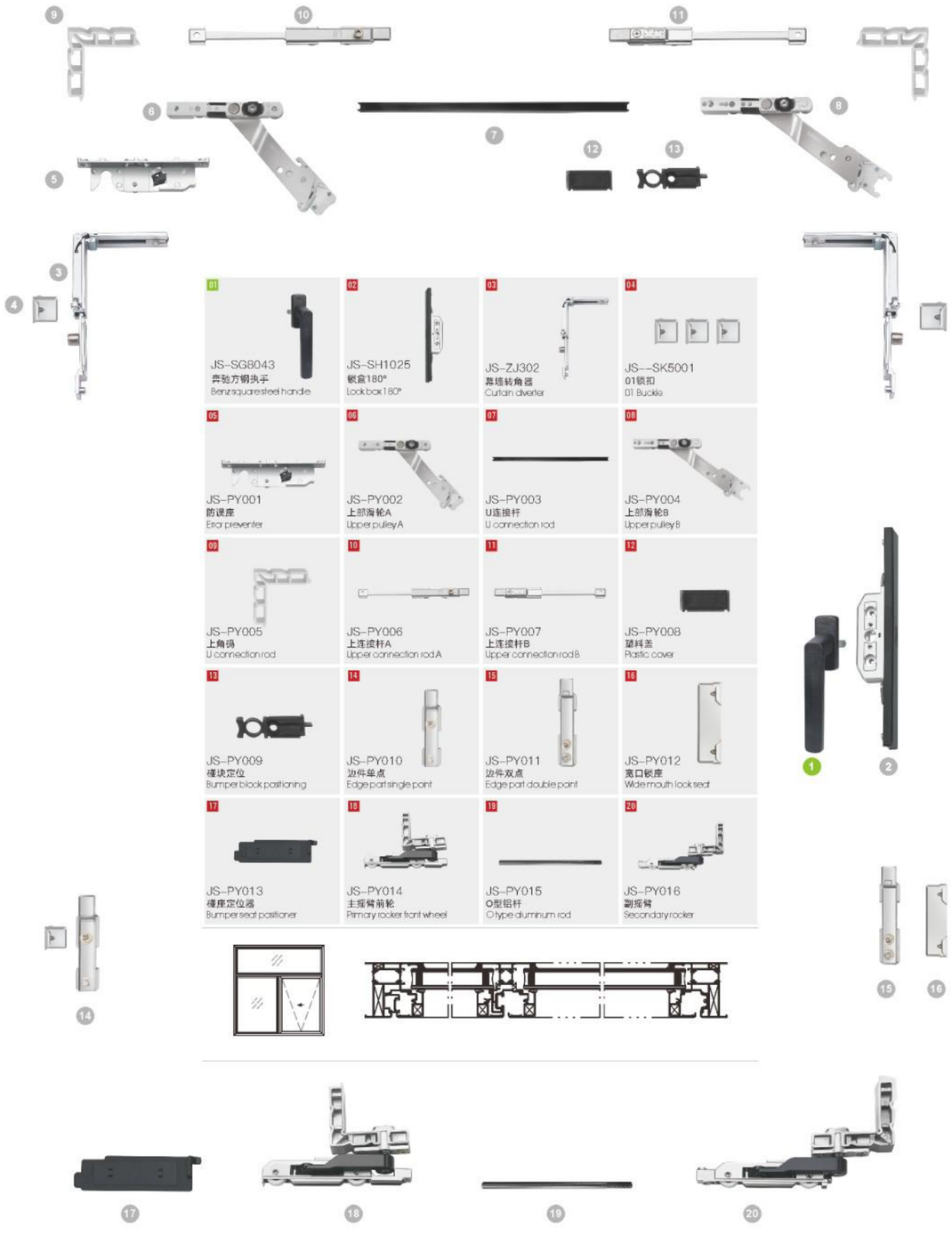

| | | | |
|---|---|---|---|
| 01 JS-SG8043 奔驰方钢执手 Benz square steel handle | 02 JS-SH1025 锁盒180° Lock box 180° | 03 JS-ZJ302 幕墙转角器 Curtain diverter | 04 JS--SK5001 01锁扣 01 Buckle |
| 05 JS-PY001 防误座 Error preventer | 06 JS-PY002 上部滑轮A Upper pulley A | 07 JS-PY003 U连接杆 U connection rod | 08 JS-PY004 上部滑轮B Upper pulley B |
| 09 JS-PY005 上角码 U connection rod | 10 JS-PY006 上连提杆A Upper connection rod A | 11 JS-PY007 上连提杆B Upper connection rod B | 12 JS-PY008 塑料盖 Plastic cover |
| 13 JS-PY009 橡块定位 Bumper block positioning | 14 JS-PY010 边件单点 Edge part single point | 15 JS-PY011 边件双点 Edge part double point | 16 JS-PY012 宽口锁座 Wide mouth lock seat |
| 17 JS-PY013 橡座定位器 Bumper seat positioner | 18 JS-PY014 主摇臂前轮 Primary rocker front wheel | 19 JS-PY015 O型铝杆 O type durminum rod | 20 JS-PY016 副摇臂 Secondary rocker |



# DOUBLE WING HARDWARE SYSTEM

JS-SF65 双飞翼五金系统 /380

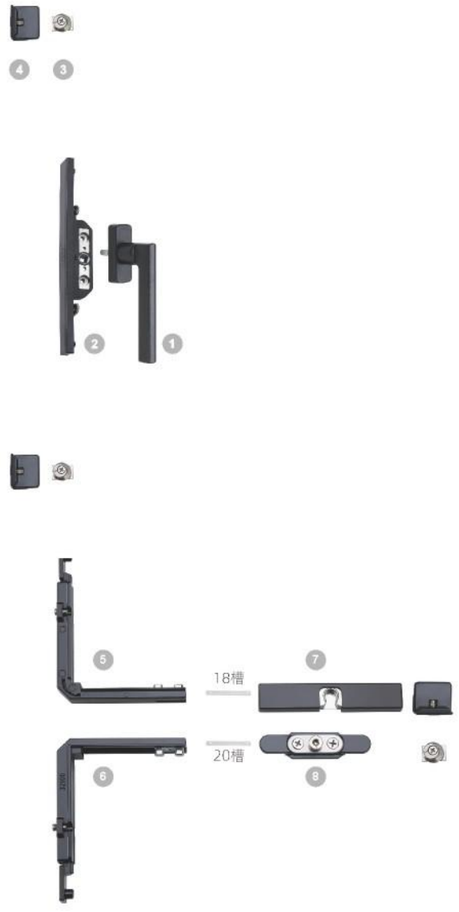


对开门型材通用，可做门可做窗（注意中挺双槽口）
Universal split door section bars, can be used for doors and windows (pay attention to the middle rail double rebate)

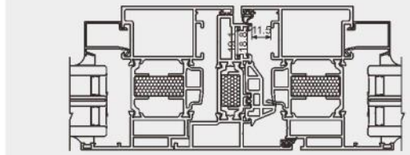

| | | |
|---|---|---|
| 01 JS-SG8048 985方钢执手 985 square steel handle | 02 JS-1028 锁盒180° Lock box 180° | 03 JS-LJ2022 移动调节锁点 Moveable adjusting lock point |
| 04 JS-SK5003 07锁扣 07Buckle | 05 JS-ZJ308 双飞翼转角器 Double wing diverter | 06 JS-ZJ308 双飞翼转角器 Double wing diverter |
| 07 JS-DK20122 双飞翼框扣 Double wing frame catch | 08 JS-LJ20155 双飞翼扇扣 Double wing leaf catch | 09 JS-HY5700 调节门合页(带轴承) Adjusting door hinge (with bearing) |



## 配置说明 / Allocation explanation /

1、以上执手有多款可供选择(38页-45页)；
2、内平开下悬组件必要时可配欧槽限位撑(JS-FC3039)以达到理想效果；
3、五金件不分左、右扇。

1. There are several kinds of handles for your choice(P38-P45) ; ;
2. If necessary, swing-in lower suspension parts can be matched with European groove limit support (JS-FC3039) for the best effect;
3. Hardware is not divided into left sash and right sash.

注 Note 绿色标记为可供选择。
Green marking is available for choice

## Top-hung door and window corner multi-point lock
## JS-MP701 上悬门窗带转角多点锁 /150

注 绿色标记为可供选择。
Green marking is available for choice

20mm槽口

| 序号 NO. | 配件名称 NAME | | 配件编号 PART NO. | 数量 QUANTITY |
|---|---|---|---|---|
| 1 | 内平开执手 | Swing-in handle | 可选 Optional | 1 |
| 2 | 连接中件 | Middle connector | JS-2009 | 1 |
| 3 | 连接件 | Connector | JS-2006 | 7 |
| 4 | 锁扣 | Buckle | JS-5010 | 6 |
| 5 | 转角 | Diverter | JS-302 | 2 |
| 6 | 伸缩杆 | Expansion link | JS-3038 | 2 |
| 7 | 上悬四连杆(22槽) Upper suspension four-inkage bar (22 rebate) | | JS-3032 | 2 |




JS-ZS821

JS-ZS813

## 20 rebate top-hung four-point lock assembly
## JS-MP702 20槽口上悬四点锁组件 / 150

注 绿色标记为可供选择。
Green marking is available for choice

20mm槽口

| 序号 NO. | 配件名称 NAME | | 配件编号 PART NO. | 数量 QUANTITY |
|---|---|---|---|---|
| 1 | 外开执手 | Swing-out handle | 可选 Optional | 1 |
| 2 | 外开T钉中件 Outward opening T nail middle part | | JS-2015 | 1 |
| 3 | 连接件 | Connector | JS-2006 | 2 |
| 4 | 01新锁扣 | 01 New buckle | JS-5002 | 4 |
| 5 | 转角 | Diverter | JS-302 | 2 |
| 6 | 伸缩杆 | Expansion link | JS-3038 | 2 |
| 7 | 229助力隐藏铰链 229 boosting invisible hinge | | JS-003 | 2 |




## Top-hung curtain three-point lock assembly
## JS-MP703 上悬幕墙三点锁组件 / 35

20mm槽口

| 序号 NO. | 配件名称 NAME | | 配件编号 PART NO. | 数量 QUANTITY |
|---|---|---|---|---|
| 1 | 内平开执手 | Swing-in handle | 可选 Optional | 1 |
| 2 | 连接中件 | Middle connector | JS-2009 | 1 |
| 3 | 连接件 | Connector | JS-2006 | 2 |
| 4 | 幕墙锁扣 | Curtain lock catch | JS-5010 | 3 |



# PLASTIC STEEL INWARD TILT-TURN WINDOW

ND–PVC1001 塑钢内平开内倒系列 /130

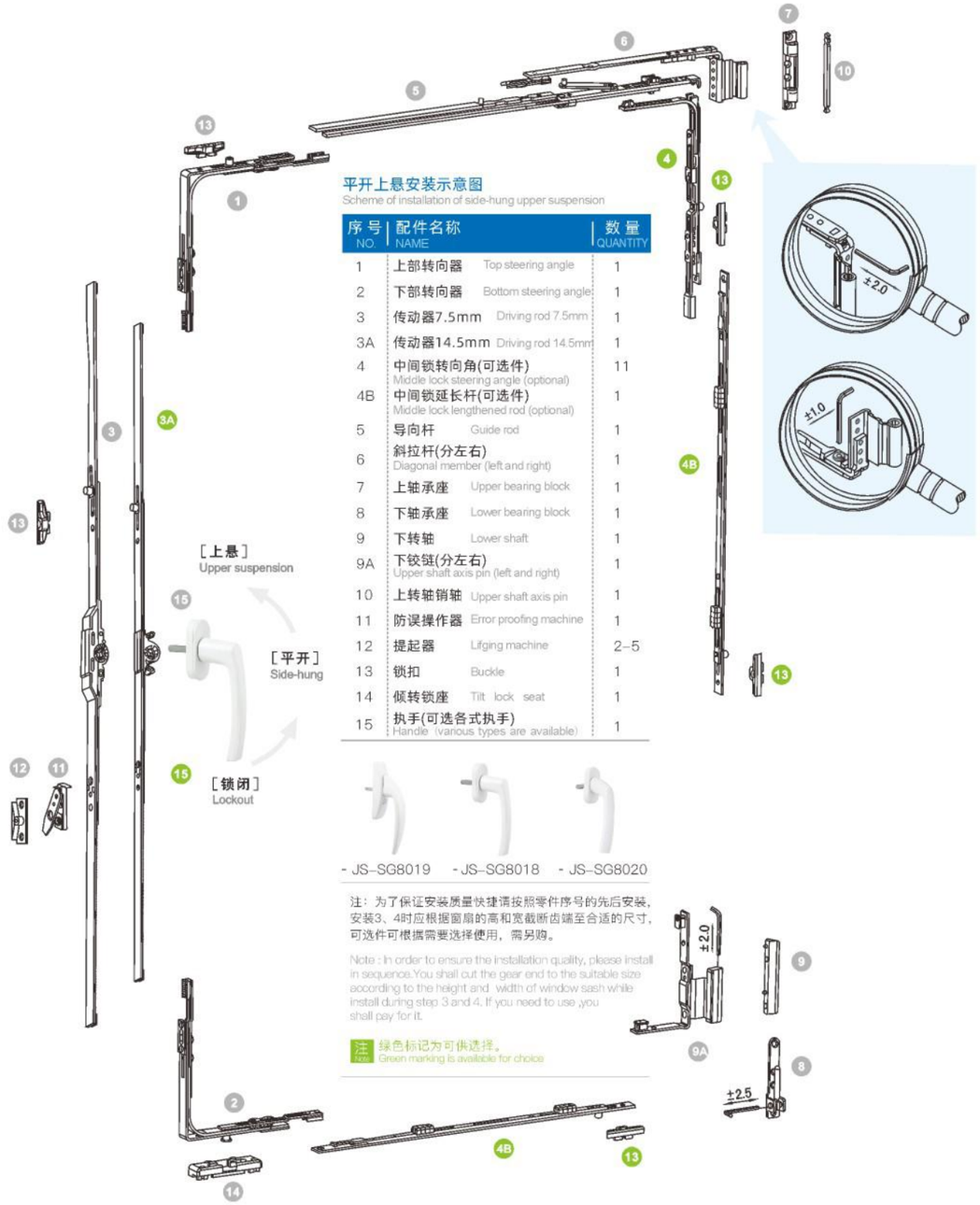


平开上悬安装示意图

Scheme of installation of side-hung upper suspension

| 序号 NO. | 配件名称 NAME | | 数量 QUANTITY |
|---|---|---|---|
| 1 | 上部转向器 | Top steering angle | 1 |
| 2 | 下部转向器 | Bottom steering angle | 1 |
| 3 | 传动器7.5mm | Driving rod 7.5mm | 1 |
| 3A | 传动器14.5mm | Driving rod 14.5mm | 1 |
| 4 | 中间锁转向角(可选件) Middle lock steering angle (optional) | | 11 |
| 4B | 中间锁延长杆(可选件) Middle lock lengthened rod (optional) | | 1 |
| 5 | 导向杆 | Guide rod | 1 |
| 6 | 斜拉杆(分左右) Diagonal member (left and right) | | 1 |
| 7 | 上轴承座 | Upper bearing block | 1 |
| 8 | 下轴承座 | Lower bearing block | 1 |
| 9 | 下转轴 | Lower shaft | 1 |
| 9A | 下铰链(分左右) Upper shaft axis pin (left and right) | | 1 |
| 10 | 上转轴销轴 | Upper shaft axis pin | 1 |
| 11 | 防误操作器 | Error proofing machine | 1 |
| 12 | 提起器 | Lifging machine | 2–5 |
| 13 | 锁扣 | Buckle | 1 |
| 14 | 倾转锁座 | Tilt lock seat | 1 |
| 15 | 执手(可选各式执手) Handle (various types are available) | | 1 |

- JS–SG8019 - JS–SG8018 - JS–SG8020

注：为了保证安装质量快捷请按照零件序号的先后安装，安装3、4时应根据窗扇的高和宽截断齿端至合适的尺寸，可选件可根据需要选择使用，需另购。

Note : In order to ensure the installation quality, please install in sequence.You shall cut the gear end to the suitable size according to the height and width of window sash while install during step 3 and 4. If you need to use ,you shall pay for it.

注 Note 绿色标记为可供选择。 Green marking is available for choice



# ALUMINUM WOOD TILTING AND TURNING SASH OPENING INWARD 13 SERIES

ND–PVC1002 铝木内平开内倒13系列 喷塑140/纯铜230

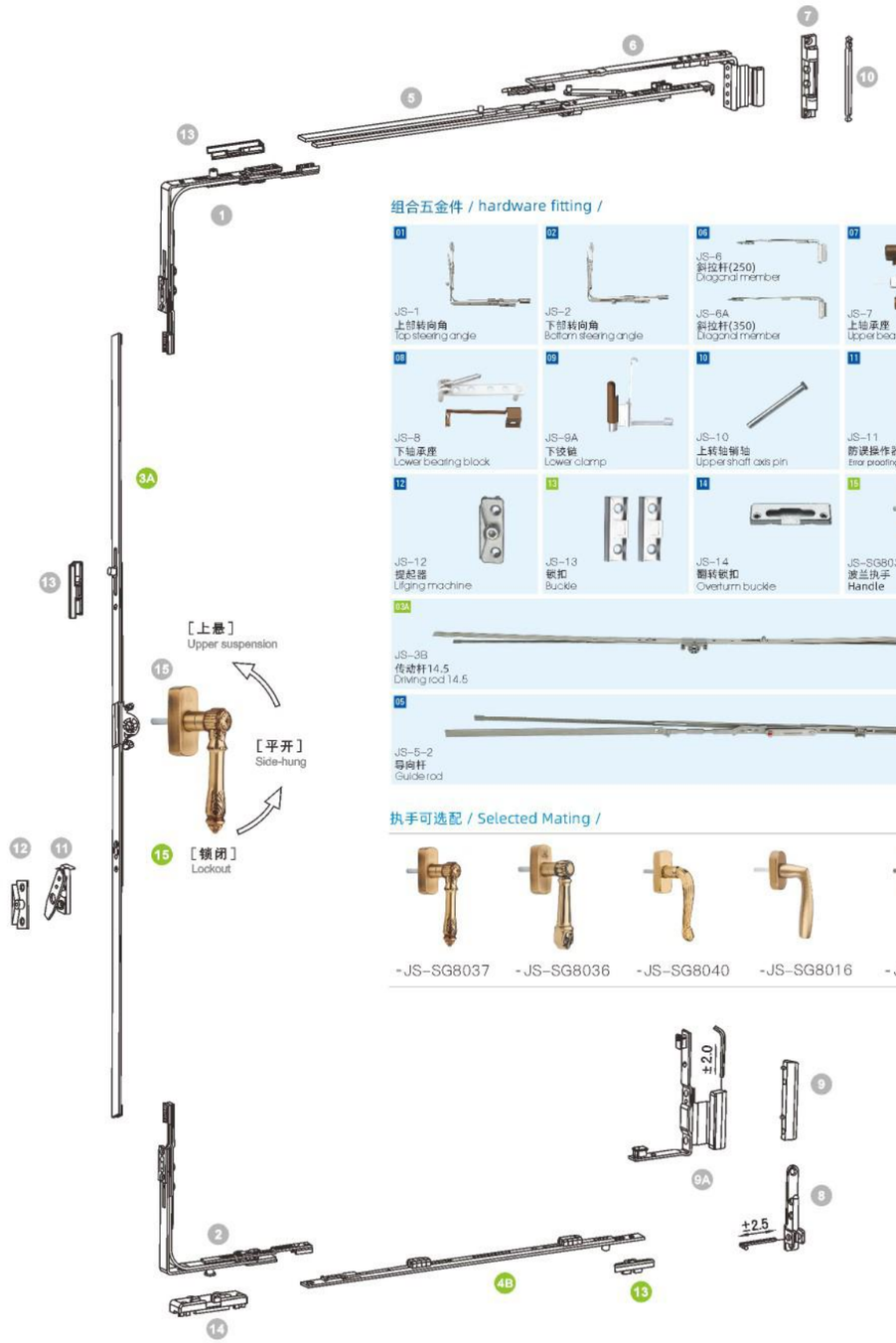


组合五金件 / hardware fitting /




执手可选配 / Selected Mating /



- JS–SG8037 - JS–SG8036 - JS–SG8040 - JS–SG8016 - JS–SG8039

WINDOW CONTROL
五星级配件

# HANDLE SERIES
## 执手系列

幻影执手系列
Vision handle series



### JS-ZS8022
方座执手(内开)
Square seat handle (internal open) /20

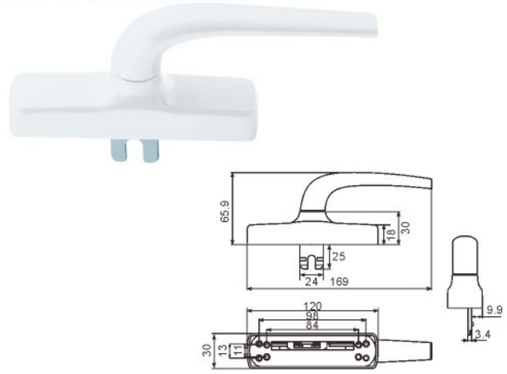


### JS-ZS8133
弓形执手(内开)
Bow-shaped handle (inward opening) /24

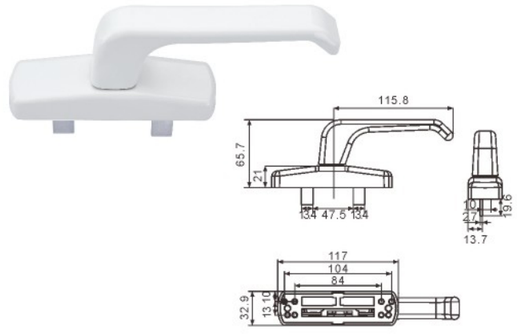


### JS-ZS802
直柄执手(内开)
Straight handle (internal open) /16

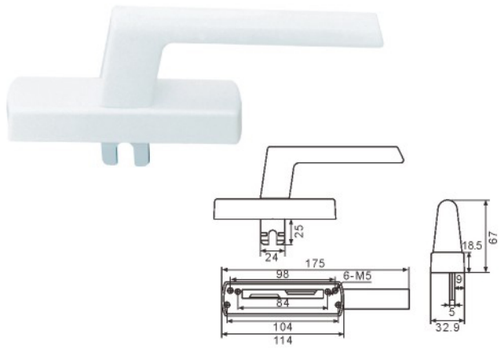


### JS—ZS855
985内开执手
985 inward opening handle /20

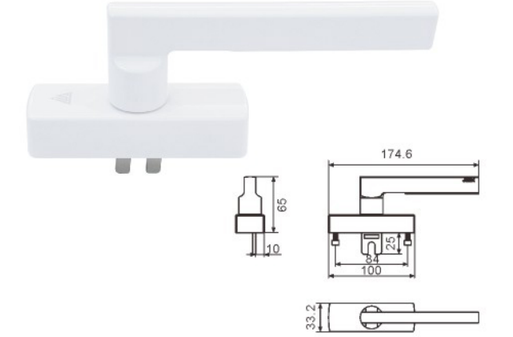


### JS-ZS803
弧形执手(内开)
Arc handle (internal open) /16




### JS-ZS8033
港式内开执手
Hong Kong style inward opening handle /20

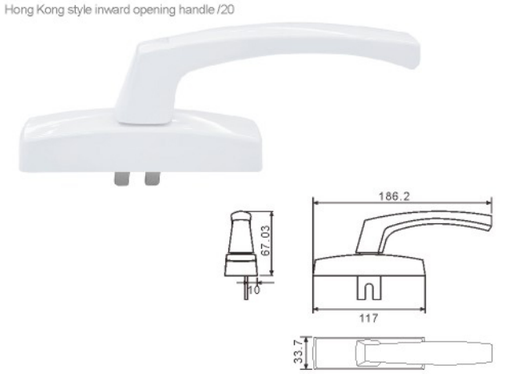

## JS-ZS804
加重执手(内开)
Weighted handle (internal open) /16




## JS-ZS805
圆柄执手(内开)
Circle handle (internal open) /15




## JS-ZS806
欧式执手(内开)
European style handle (internal open) /16

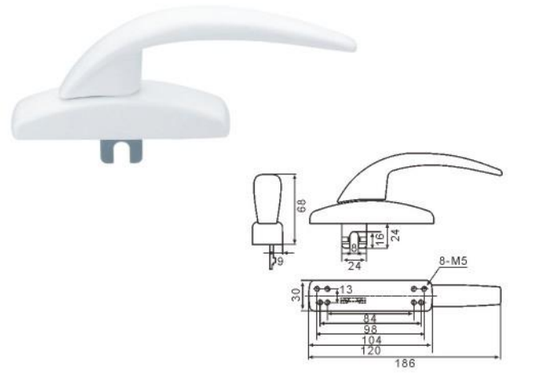


注:拔叉有多种长度选择
Note: There are several lengths of yoke shifter for your choice

## JS-ZS807
圆柄执手(外开)
Circle handle (external open) /16




注:拔叉有多种长度选择
Note: There are several lengths of yoke shifter for your choice

## JS-ZS808
小二点小座执手
Second point small seat handle /11




注:拔叉有多种长度选择
Note: There are several lengths of yoke shifter for your choice

## JS-ZS809
方座执手(外开)
Square seat handle (external open) /16




注:拔叉有多种长度选择
Note: There are several lengths of yoke shifter for your choice





## JS-ZS810
内外开执手(外开)
Internal & external opening handle (external open) /15




注:拔叉有多种长度选择
Note: There are several lengths of yoke shifter for your choice

## JS-ZS811
小二点大座执手
Second point big seat handle /12




注:拔叉有多种长度选择
Note: There are several lengths of yoke shifter for your choice

## JS-ZS812
中二点执手 (外开)
Middle two-point handle (external open) /13.5




注:拔叉有多种长度选择
Note: There are several lengths of yoke shifter for your choice

## JS-ZS813
弓形执手(内开)
Arch handle (internal open) /16

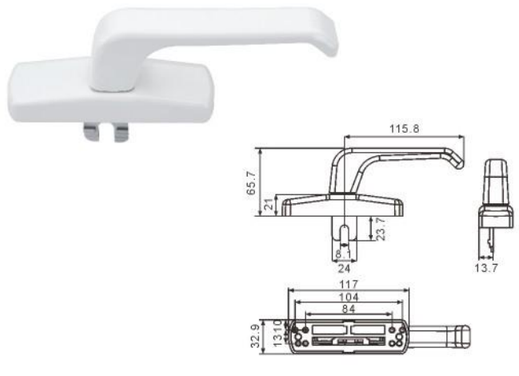


## JS-ZS814
57外开执手(不分左右)
57 swing-out handle (no left and right) /12




注:拔叉有多种长度选择
Note: There are several lengths of yoke shifter for your choice

## JS-ZS815
A款直柄执手(外开)
A straight handle (external open) /24

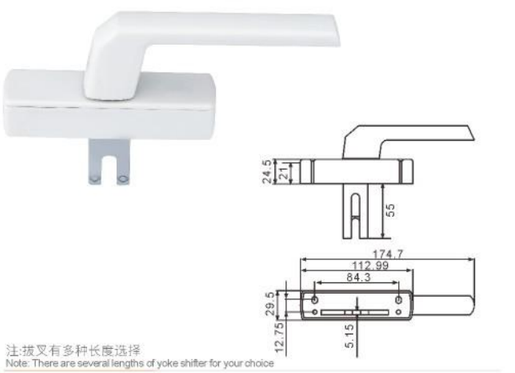


注:拔叉有多种长度选择
Note: There are several lengths of yoke shifter for your choice

## JS-ZS816
德式执手(内开)
Germany style handle (internal open) /16




注:拔叉有多种长度选择
Note: There are several lengths of yoke shifter for your choice

## JS-ZS818
法式执手(内开)
French style handle (internal open) /15

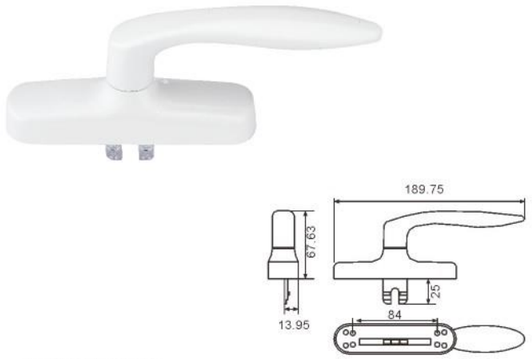


注:拔叉有多种长度选择
Note: There are several lengths of yoke shifter for your choice

## JS-ZS820
美式执手(内开)
American style handle (internal open) /16




注:拔叉有多种长度选择
Note: There are several lengths of yoke shifter for your choice

## JS-ZS837
美克执手(内开)
Mech handle (opening inward) /17




注:拔叉有多种长度选择
Note: There are several lengths of yoke shifter for your choice

## JS-ZS819
法式执手(外开)
French style handle (external open) /16

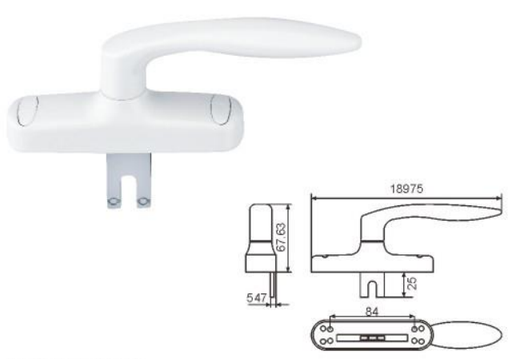


注:拔叉有多种长度选择
Note: There are several lengths of yoke shifter for your choice

## JS-ZS821
专利产品 PATENT PRODUCT
带锁直柄执手(内外开)
Straight handle with lock (Internal-external open) /33

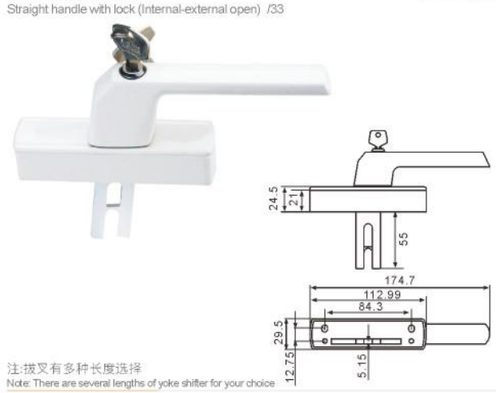


注:拔叉有多种长度选择
Note: There are several lengths of yoke shifter for your choice





## JS-ZS823
美的大把执手(内开)
Media big handle (internal open) /16




注:拔叉有多种长度选择
Note: There are several lengths of yoke shifter for your choice

## JS-ZS825
大柄执手(内开)
Large handle (internal open) /16




注:拔叉有多种长度选择
Note: There are several lengths of yoke shifter for your choice

## JS-ZS839
弧形执手带锁(内外开)
Arc handle with lock (Internal-external open) /25




注:拔叉有多种长度选择
Note: There are several lengths of yoke shifter for your choice

## JS-ZS824
通用执手(外开)
Universal handle (external open) 铝11/锌13.5




注:拔叉有多种长度选择
Note: There are several lengths of yoke shifter for your choice

## JS-ZS826
专利产品 PATENT PRODUCT
保险直柄执手(内外开)
Insurance straight handle (Internal-external open) /32

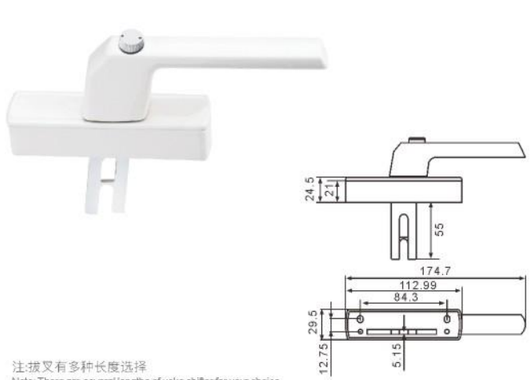


注:拔叉有多种长度选择
Note: There are several lengths of yoke shifter for your choice

## JS-ZS843
弧形外开执手(旋盖)
Arc outward opening handle (rotary cover) /18




注:拔叉有多种长度选择
Note: There are several lengths of yoke shifter for your choice

## JS-ZS830
意式执手(内外开)
Italian style handle (Internal-external open) /氧化25

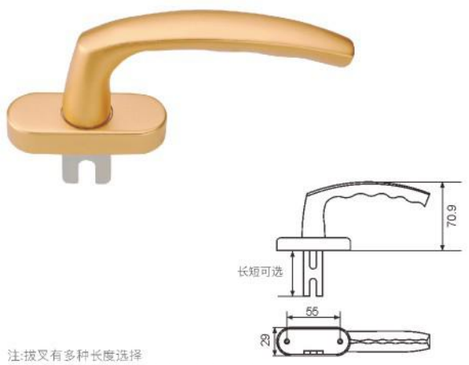


注:拔叉有多种长度选择
Note: There are several lengths of yoke shifter for your choice

## JS-ZS831
意式大座执手(内外开)
Italian style large base handle (Internal-external open) /氧化36

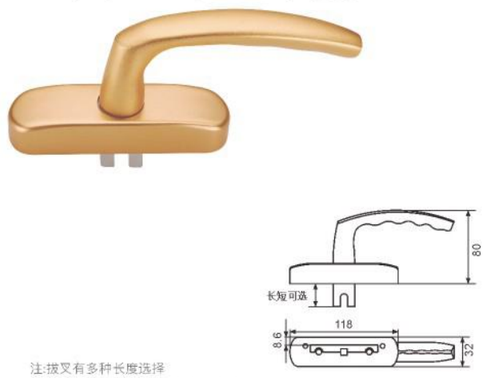


注:拔叉有多种长度选择
Note: There are several lengths of yoke shifter for your choice

## JS-ZS832
广式执手(内外开)
Cantonese style handle (Internal-external open) 喷塑16/氧化25

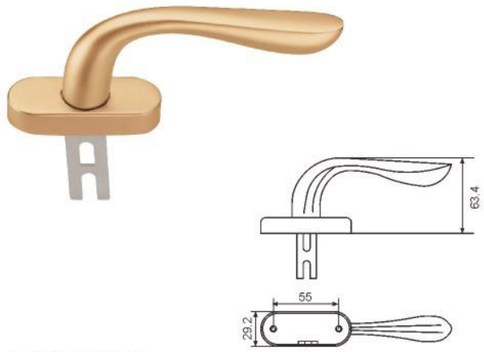


注:拔叉有多种长度选择
Note: There are several lengths of yoke shifter for your choice

## JS-ZS833
广式大座执手(内外开)
Cantonese style large base handle (Internal-external open) /氧化36

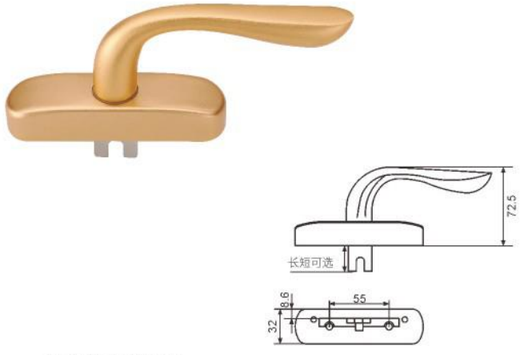


注:拔叉有多种长度选择
Note: There are several lengths of yoke shifter for your choice

## JS-ZS834
弧形指纹执手(内开)
Arc fingerprint handle (internal open) 喷塑17/氧化35

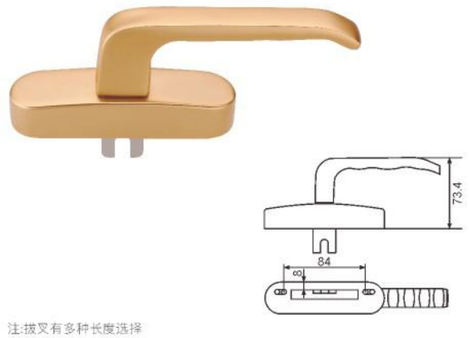


注:拔叉有多种长度选择
Note: There are several lengths of yoke shifter for your choice

## JS-ZS835
弓形指纹执手(内开)
Bow-shaped fingerprint handle (internal open) 喷塑17/氧化35




注:拔叉有多种长度选择
Note: There are several lengths of yoke shifter for your choice





## JS-ZS836
专利产品 PATENT PRODUCT
德式弯执手(分左右)
German style bent handle (including left and right parts) 喷塑17/喷漆22

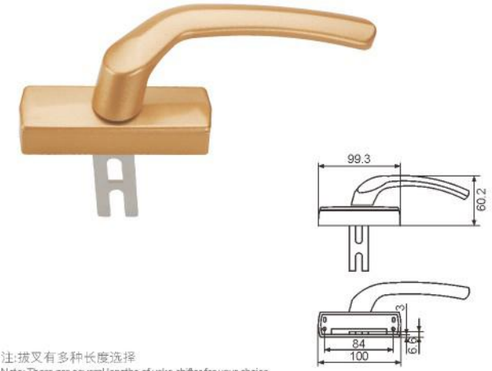


注:拔叉有多种长度选择
Note: There are several lengths of yoke shifter for your choice

## JS-ZS817
专利产品 PATENT PRODUCT
德式执手(外开)
German style handle (external open) 喷塑17/氧化30

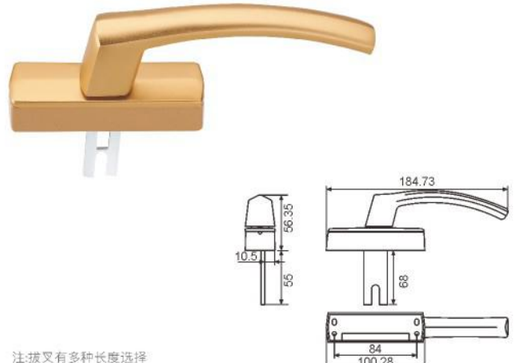


注:拔叉有多种长度选择
Note: There are several lengths of yoke shifter for your choice

## JS-ZS829
博士执手(内外开)
Bosch handle (Internal-external open) 喷塑20/氧化36




注:拔叉有多种长度选择
Note: There are several lengths of yoke shifter for your choice

## JS-ZS828
博美执手
Bomei handle /氧化36




注:拔叉有多种长度选择
Note: There are several lengths of yoke shifter for your choice

## JS-ZS840
中式执手(内开)
Chinese style handle (internal open) 锌/古铜50




注:拔叉有多种长度选择
Note: There are several lengths of yoke shifter for your choice

## JS-ZS841
专利产品 PATENT PRODUCT
英式执手(内开)
British style handle (internal open) 锌/古铜55

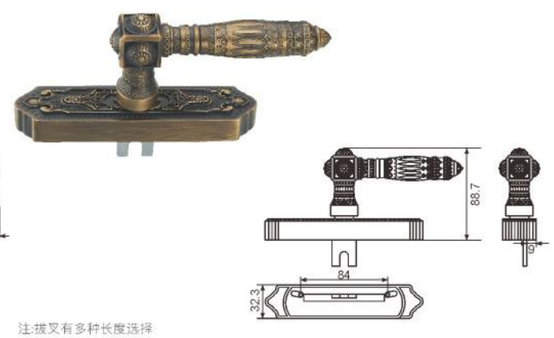


注:拔叉有多种长度选择
Note: There are several lengths of yoke shifter for your choice

## JS-ZS844
欧尚执手
Oushang handle /15




注:拔叉有多种长度选择
Note: There are several lengths of yoke shifter for your choice

## JS-ZS845
欧尚歪把执手(分左右)
Oushang oblique handle (including left and right parts) /16




注:拔叉有多种长度选择
Note: There are several lengths of yoke shifter for your choice

## JS-ZS846
豪华指纹执手
Luxurious handle /16




注:拔叉有多种长度选择
Note: There are several lengths of yoke shifter for your choice

## JS-ZS847
奔驰大把执手(内开)
Benz handle (internal open) /喷塑20

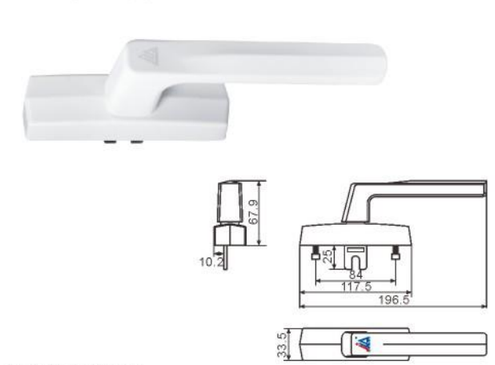


注:拔叉有多种长度选择
Note: There are several lengths of yoke shifter for your choice

## JS-ZS838
瑞士执手(提盖)
Swiss handle (lifting cover) /15

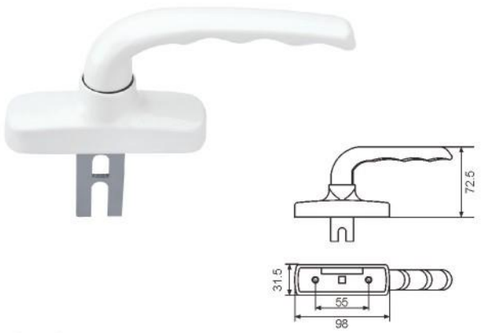


注:拔叉有多种长度选择
Note: There are several lengths of yoke shifter for your choice

## JS-ZS842
瑞典执手(提盖)
Swedish handle (lifted cover) /16




注:拔叉有多种长度选择
Note: There are several lengths of yoke shifter for your choice





## JS-ZS848
小奔驰内开180°执手
Small Benz inward opening 180° handle /20

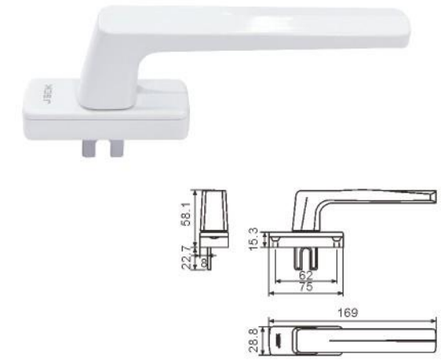


## JS-ZS849
港式E内开执手
Hong Kong style E inward opening handle /20

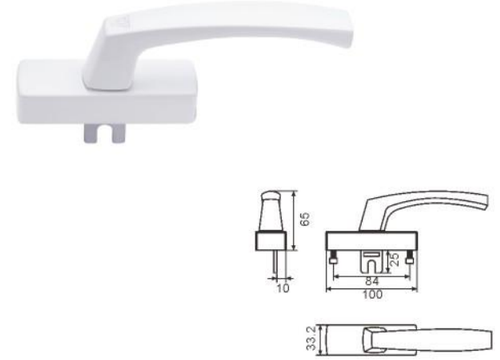


## JS-ZS850
奔驰外开执手
Benz outward opening handle /20

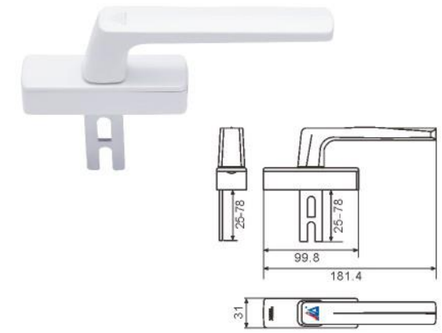


## JS-ZS851
奔驰E内开执手
Benz E inward opening handle /20

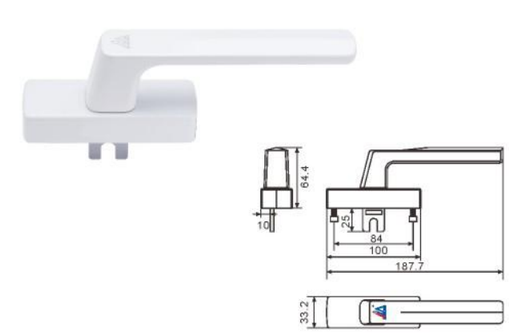


## JS-ZS852
幻影外开执手
Vision outward opening handle /20

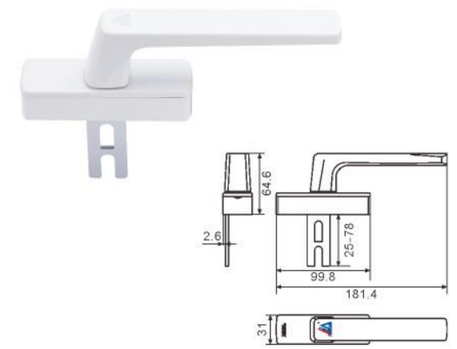


## JS-ZS853
幻影E内开执手
Vision E inward opening handle /20

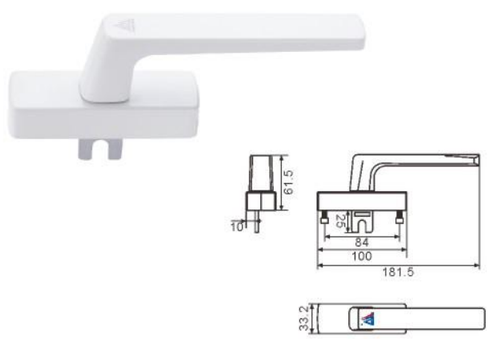

颜色可选 Non milling C-lock box

纳米沙黑 Nano sand black　白色 White　氟碳银色 Fluorocarbon silver　氟碳灰色 Fluorocarbon gray　氟碳青铜色 Fluorocarbon bronze color　氟碳金色 Fluorocarbon gold

WINDOW CONTROL
五星级配件

# VARIOUS HANDLE

方钢执手



∧ 幻影方钢执手 Vision square handle



## JS-QZ6201
03执手(薄座)
03 handle (thin seat) /6

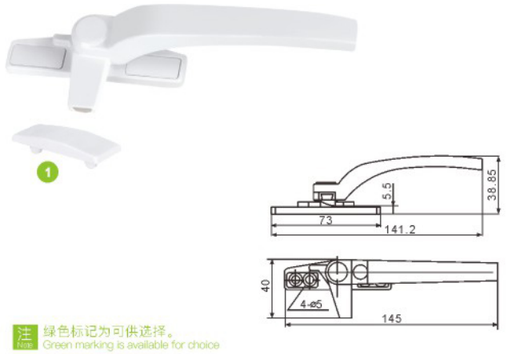


注 Note 绿色标记为可供选择。
Green marking is available for choice

## JS-QZ6202
03执手(厚座)
03 handle (thick seat) /6

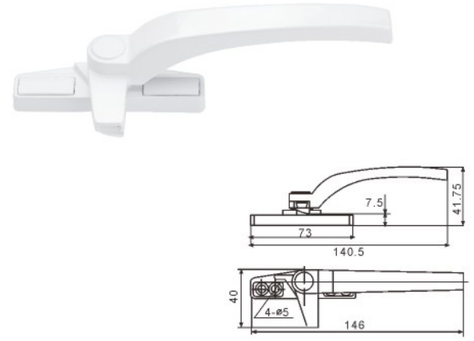


## JS-QZ6203
04执手
04 handle /7

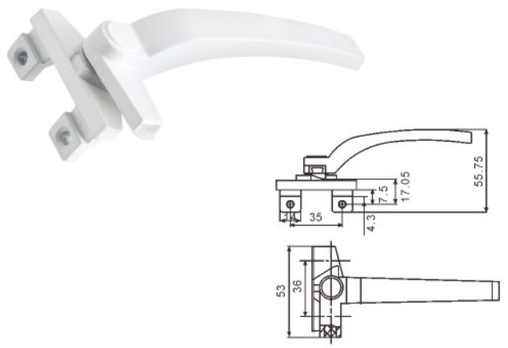


## JS-QZ6204
05平座执手
05 flat seat handle /6

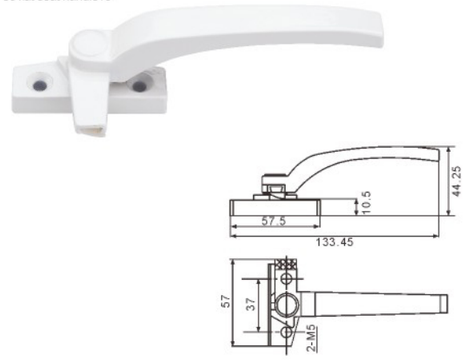


## JS-QZ6205
07弓形执手
07 bow holding handle /7

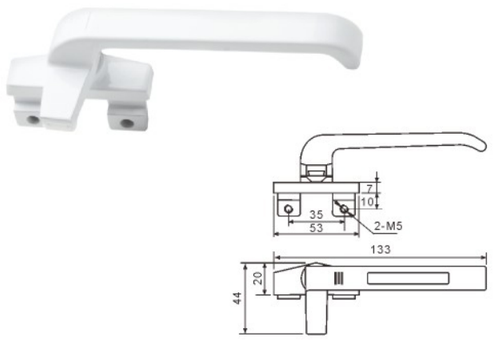


## JS-QZ6206
06执手
06 handle /6

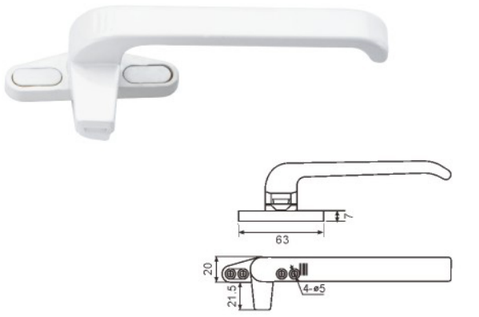

## JS-QZ6207
50-11执手
50-11 handle /5.5




## JS-QZ6208
50-12执手
50-12 handle /7




## JS-QZ6209
818内外开执手
818 internal & external opening handle /12.5




## JS-QZ6210
塑钢七字执手
Plastic steel handle /5.5




注 绿色标记为可供选择。
Note Green marking is available for choice

## JS-SG8025
直柄塑钢执手(外开)
Straight plastic steel handle (external open) /5.5

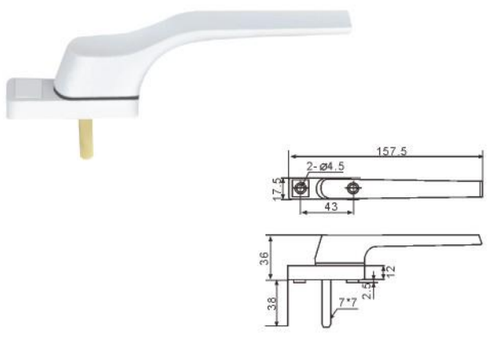


## JS-SG8027
美式塑钢执手(外开)
America plastic steel handle (external open) /6.5

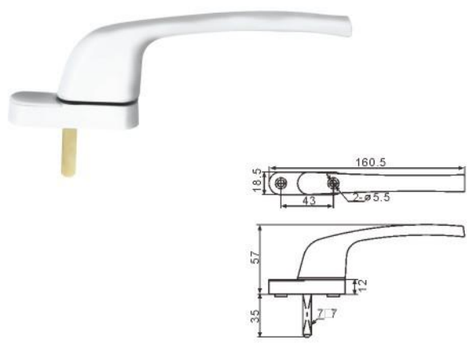






## JS-SG8029
好式B执手(分左右)
Handle B( left & right) /氧化23

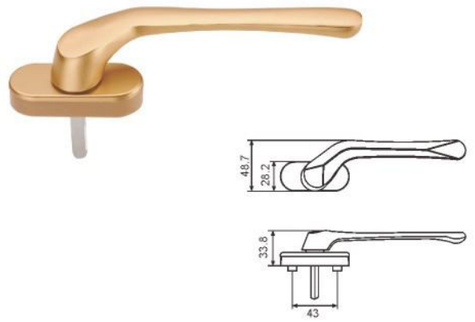


## JS-SG8030
好式A执手(分左右)
Handle A( left & right) /氧化25

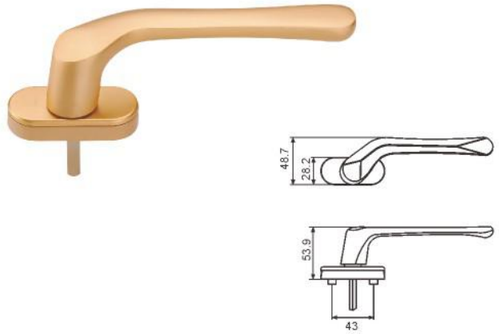


## JS-SG8031
广式执手(方钢)
Cantonese style handle(Square steel) 喷塑16/氧化25

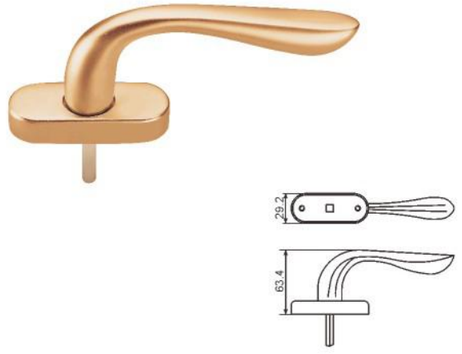


## JS-SG8035
大众执手
Dazhong handle /氧化22

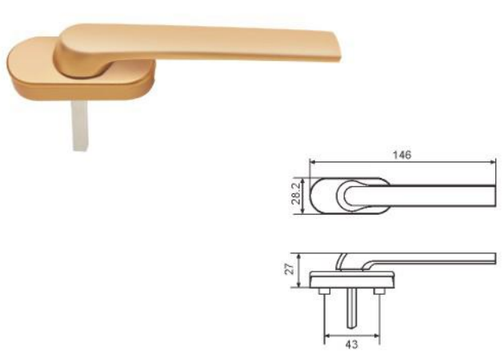


## JS-SG8033
意式执手(方钢)
Italian style handle(Square steel) /氧化25

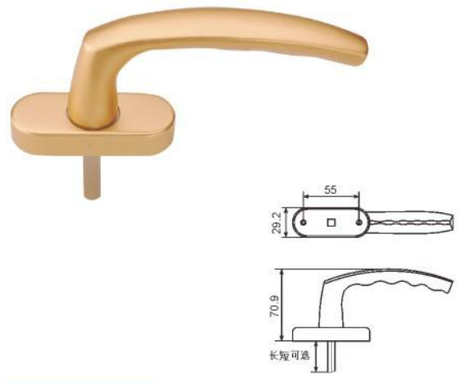


## JS-SG8034
意式大座执手(方钢)
Italian style large base handle(Square steel) /氧化35

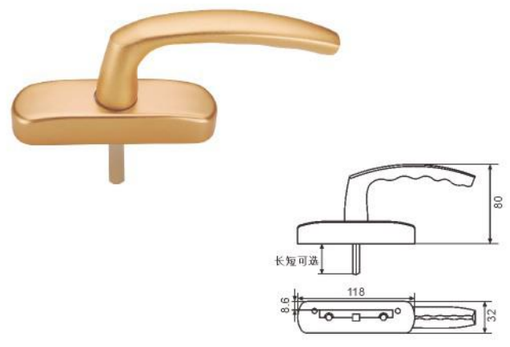

## JS-SG8017
丹麦执手
Danish handle /氧化28

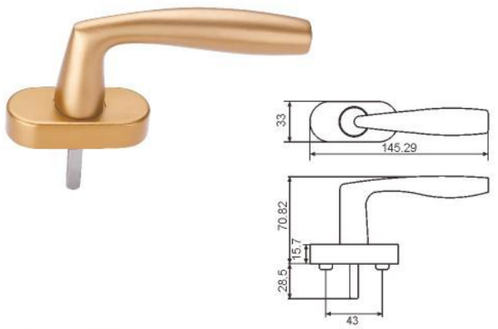


## JS-SG8039
雅典执手
Athens handle /氧化26

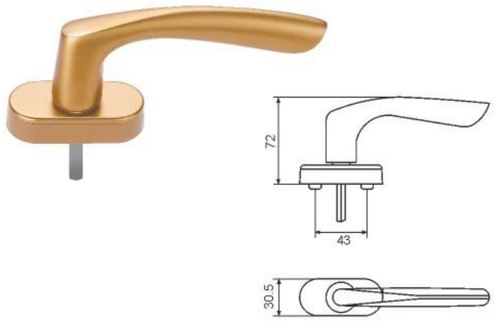


## JS-SG8016
罗马执手
Roman handle /氧化28

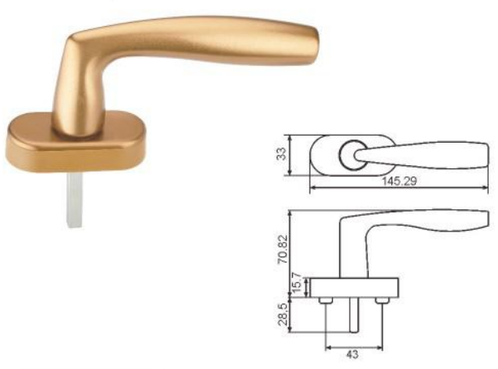


## JS-SG8040
米兰执手
Milan handle /纯铜镀金110

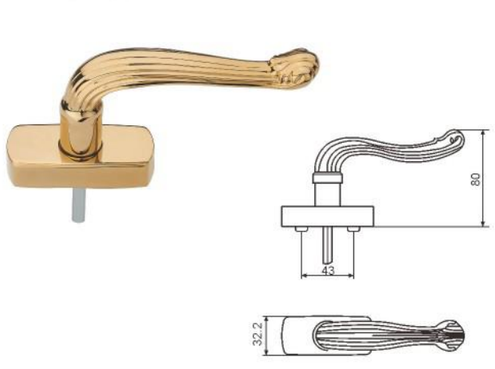


## JS-SG8036
芬兰执手
Finland handle /纯铜古铜110

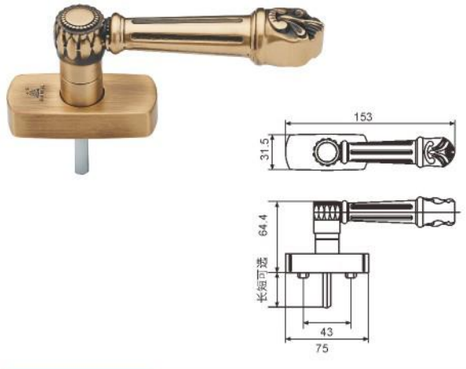


## JS-SG8037
波兰执手
Poland handle /纯铜110

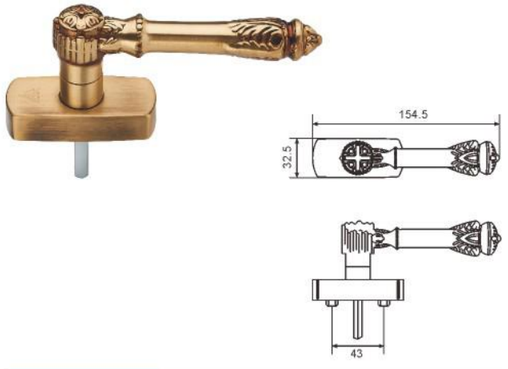






## JS-SG8023
带保险弧形执手
Arc handle with security device /13




## JS-SG8024
带钥匙弧形执手
Arc handle with key /15




## JS-SG8026
带锁直柄塑钢执手
Plastic steel handle with lock /18




## JS-SG8028
带保险直柄塑钢执手
Insurance plastic steel handle /16






## JS-SG8060
直柄对开执手(带锁带保险)
Straight folio lock handle
(with lock and with security device) /30

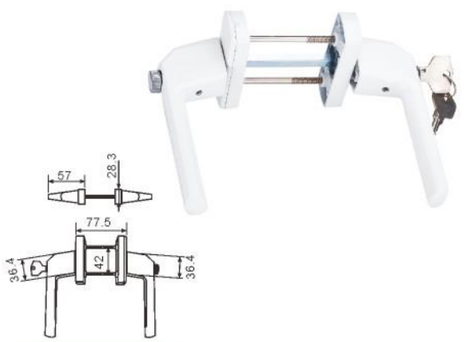


## JS-SG8061
直柄大带锁对开执手
Large straight lock with folio handle /28




## JS-SG8062
直柄对开执手
Straight folio handle /26




## JS-SG8063
弧形对开执手
Arc split handle /22

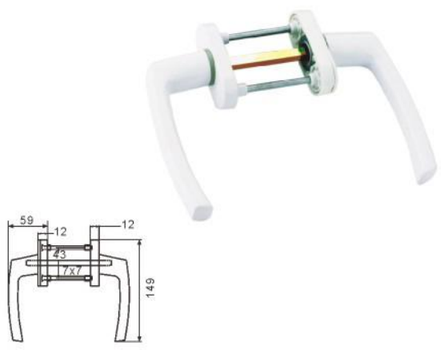


## JS-SG8064
弧形大带锁对开执手
Arc large split handle with lock /24

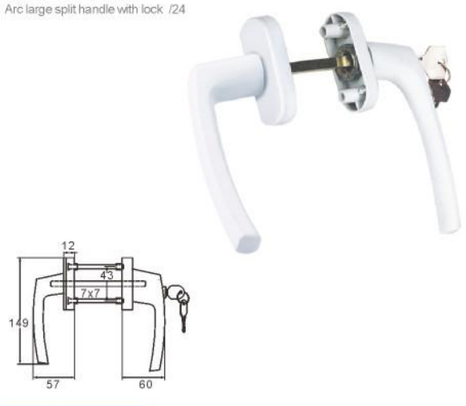


## JS-SG8065
弧形对开执手(带锁带保险)
Arc split handle (with lock and with security device /26

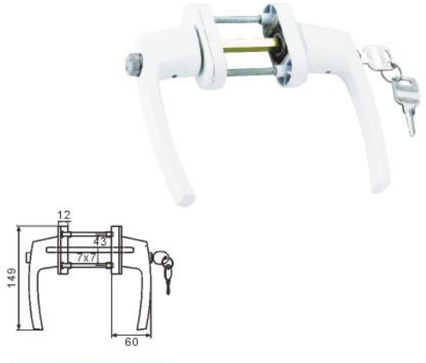






## JS-SG8019
欧式塑钢执手
Europe plastic steel handle /12

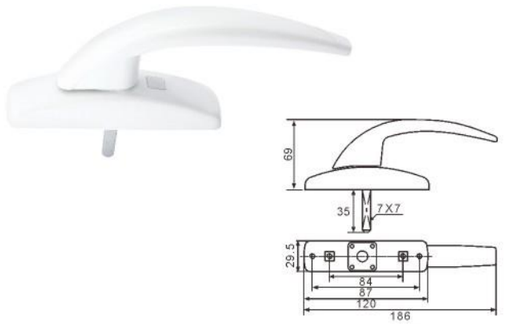


## JS-SG8018
标准塑钢执手(铝柄塑座)
Standard plastic steel handle (Aluminum) /7.5




## JS-SG8020
韩式塑钢执手
Korea plastic steel handle /11

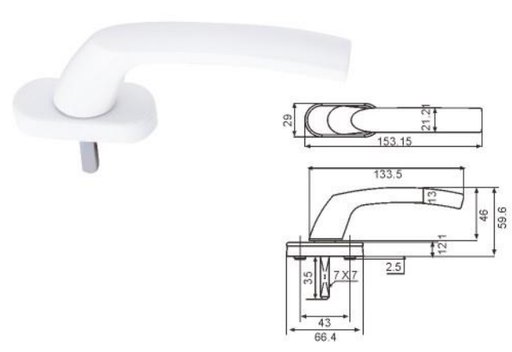


## JS-SG8021
和谐执手
Harmony handle /11

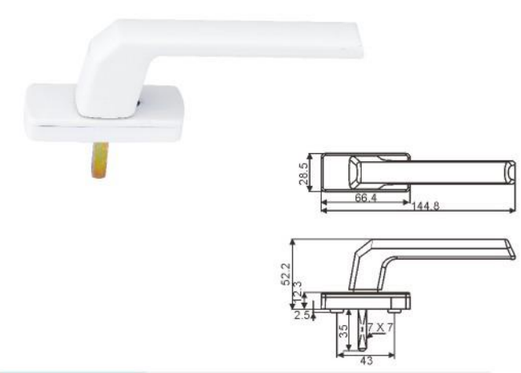


## JS-SG8041
圆尾方钢执手
Round tail square steel handle /25




## JS-SG8042
弓形方钢执手
Bow-shaped square steel handle /20

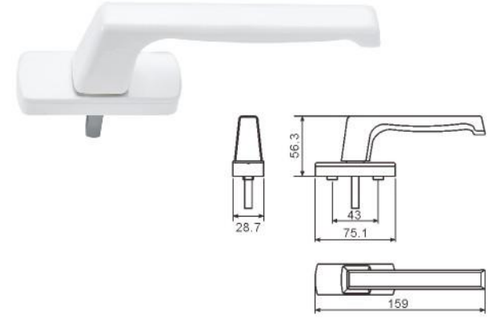

## JS-SG8043
奔驰方钢执手
Benz square steel handle /20

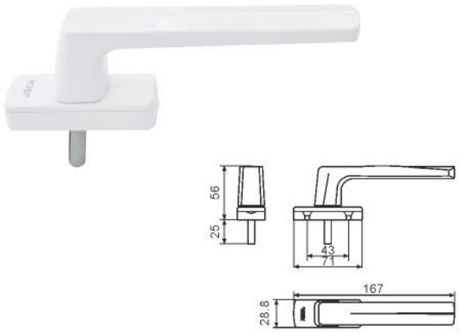


## JS-SG8044
港式方轴执手
Hong Kong style square shaft handle /20

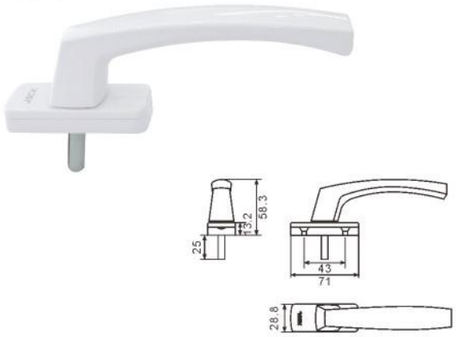


## JS-ZS8045
折叠执手
Folding handle /20

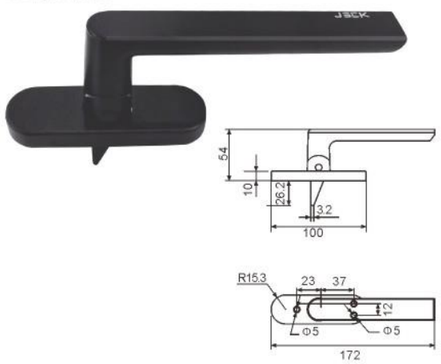




## JS-ZS8046
竹节方轴执手
Folding handle /45

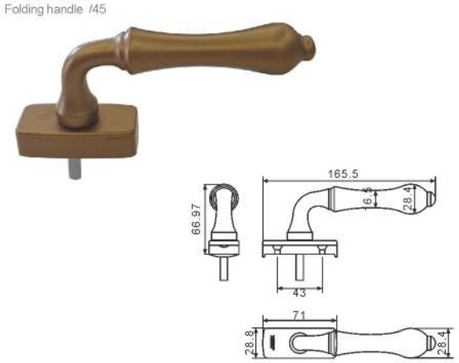


## JS-SG8047
幻影方钢执手
Vision square handle /20

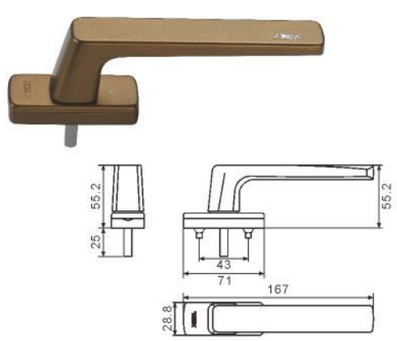


## JS-SG8048
985方钢执手
985 square steel handle /20

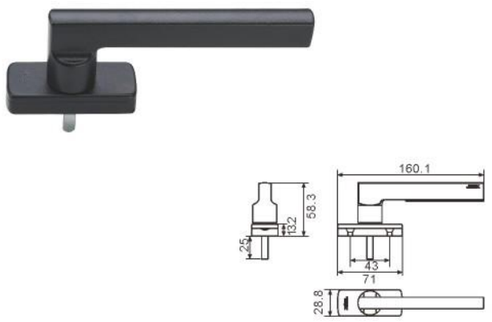


## JS-SG8049
幻影无基座执手
Vision base-free handle /30

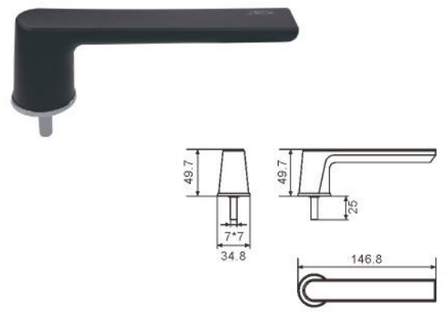


## JS-SG8050
幻影免铣执手
Vision milling-free handle /35

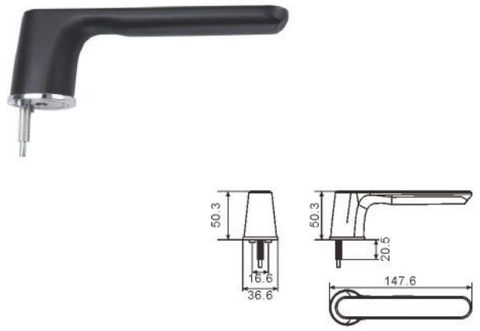


## JS-SG8051
985免铣执手
985 milling-free handle /35

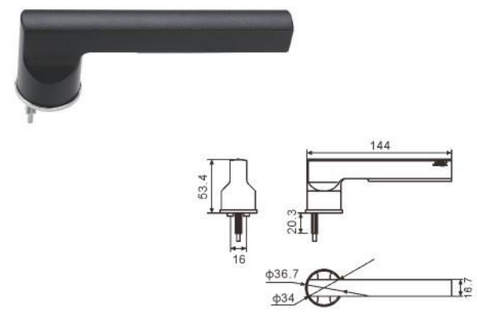


## JS-SG8052
985无基座执手
985 base-free handle /30

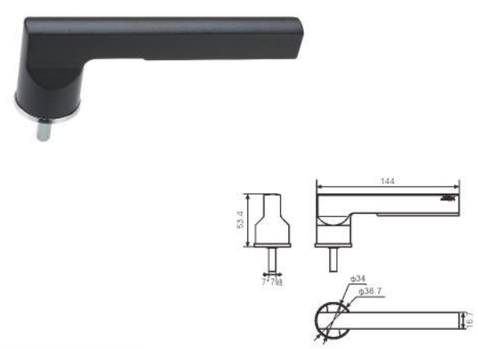


## JS-SG8053
秒针无基座执手
Second hand base-free handle /30

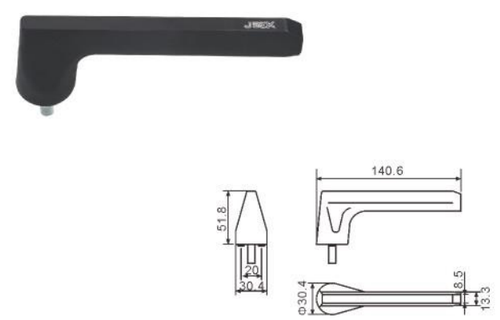

## JS-SG8054
小米方钢执手
Xiaomi square handle /20

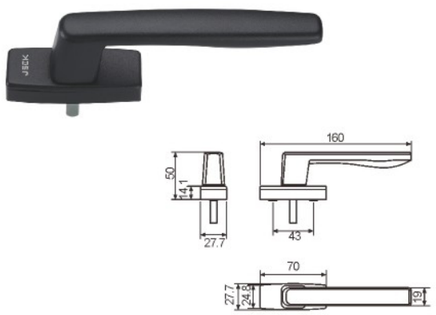


## JS-SG8055
小米方钢执手（带保险）
Xiaomi square handle (with security device) /26

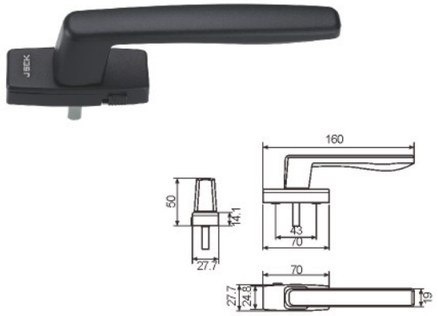


## JS-SG8068
奔驰弯执手 26高
Benz bent handle 26 high /20

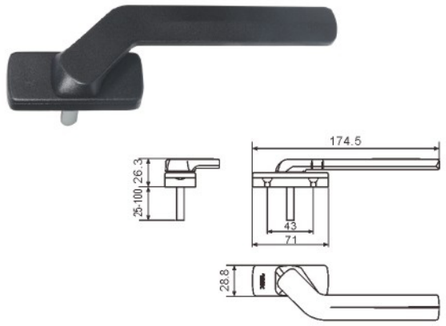


## JS-SG8069
奔驰弯执手 55高
Benz bent handle 55 high /20

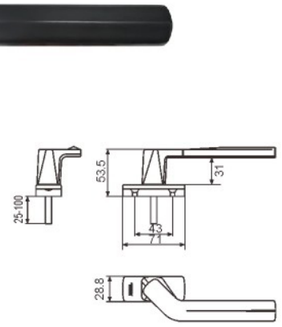




## JS-SG8050
小隐形叉（带锁）
Small invisible fork
(with lock) 喷塑13/喷漆14.5

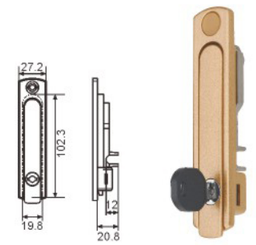


## JS-SG8051
大隐形叉（带锁）
Large invisible fork
(with lock) 喷塑14/喷漆16

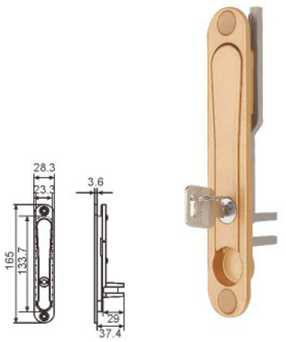


## JS-SG8052
侧开执手（不分左右）
Lateral opening handle
(no left&right) 喷塑15/喷漆17

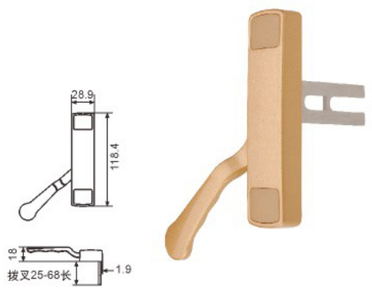


## JS-T768
剑式隐形叉
Sword type invisible fork
喷塑20/喷漆22

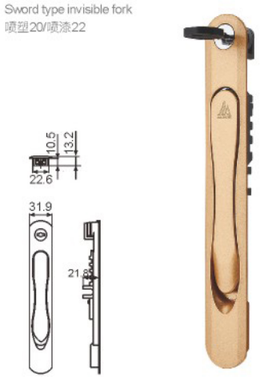


## JS-SG8054
隐形执手(带锁)
Invisible handle (with lock)
喷塑13/喷漆15

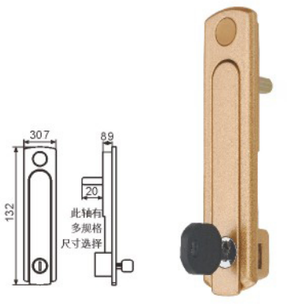


## JS-SG8022
剑式执手
Sword handle
喷塑12/喷漆14

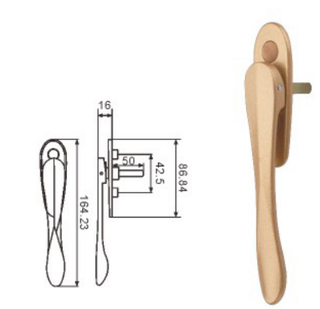


## JS-SG8053
隐形执手
Invisible handle
喷塑12/喷漆14




## JS-T767
隐形内盒
Invisible inner box /8

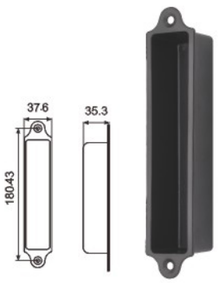


## JS-SG8055
弹锁
Spring lock /20

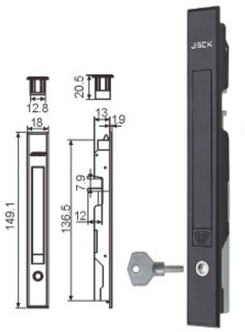


## JS-SG8056
侧开拉手
Lateral opening handle

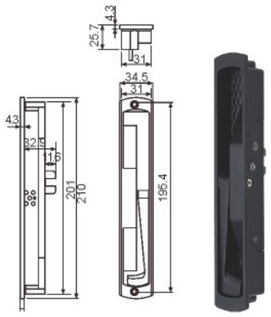

**JS-ZJ301**
D3转角器
D3 diverter /20



**JS-ZJ302**
幕墙转角器
Curtain diverter /20



**JS-ZJ303**
D5转角器
D5 diverter /24



**JS-ZJ304**
D8转角器
D8 diverter /24



**JS-ZJ305**
防撬转角器
Anti-prying diverter /25



**JS-ZJ306**
调节转角器
Adjusting diverter /25



**JS-ZJ307**
内倒后备锁
Horizontal pivoting window backup lock /20



**JS-ZJ308**
双飞翼转角器
Double wing diverter /20









**JS-BC001**
广式25叉
Guangzhou style 25 fork




**JS-BC002**
小二点外开25叉
Small two-point outward opening 25 fork




**JS-BC003**
外开靠边25叉
Outward opening side-keeping 25 fork




**JS-BC004**
弓形内开25叉
Bow-shaped inward opening 25 fork




**JS-BC005**
大把内开25叉
Large handle inward opening 25 fork




**JS-BC006**
幕墙拨叉
Curtain shifting fork

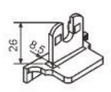


**JS-BC007**
外贸双向内开叉
Foreign trade double-way inward opening fork

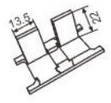


**JS-BC008**
SJLY内开叉
SJLY inward opening fork




**JS-BC009**
大把双向叉
Large handle double-way fork

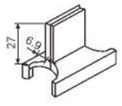


**JS-BC010**
大把内开35叉
Large handle inward opening 35 fork




**JS-BC011**
弓形内开35叉
Bow-shaped inward opening 35 fork




**JS-BC012**
弓形内开36叉
Bow-shaped inward opening 36 fork




**JS-BC013**
广式55叉
Guangzhou style 55 fork

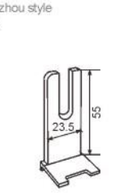


**JS-BC014**
小二点外开55叉
Small two-point outward opening 55 fork

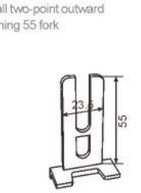


**JS-BC015**
外开靠边55叉
Outward opening side-keeping 55 fork

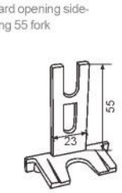


**JS-BC016**
外开不靠边55叉
Outward opening non-side-keeping 55 fork

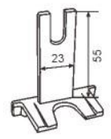


**JS-BC017**
小二点插抗外开55叉
Small two-point insertion outward opening 55 fork

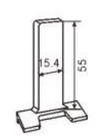


**JS-BC018**
插抗外开靠边55叉
Insertion outward opening side-keeping 55 fork

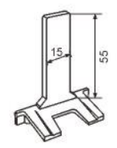


**JS-BC019**
插抗外开不靠边55叉
Insertion outward opening side-keeping 55 fork

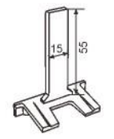


**JS-BC020**
插抗外开靠边60叉
Insertion outward opening side-keeping 60 fork

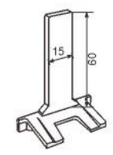


**JS-BC021**
插抗外开靠边68叉
Insertion outward opening side-keeping 68 fork

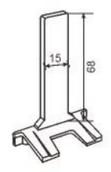


**JS-BC022**
广式68叉
Guangzhou style 68 fork

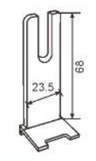


**JS-BC023**
小二点外开68叉
Small two-point outward opening 68 fork

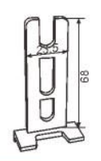


**JS-BC024**
外开靠边68叉
Outward opening side-keeping 68 fork

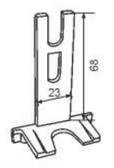


**JS-BC025**
外开靠边78叉
Outward opening side-keeping 78 fork



## JS-LJ2001
边连接件
Edge connection part /2


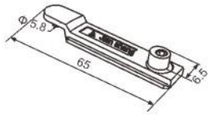


## JS-LJ2002
防盗边连接件
Anti-theft edge connection part /2


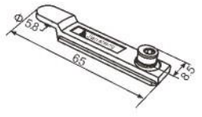


## JS-LJ2003
边连接件(A)
Edge connection part(A) /2


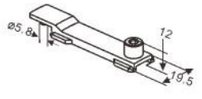


## JS-LJ2004
不锈钢边件
Stainless steel edge part /3


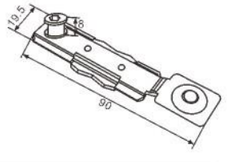


## JS-LJ2005
边件防撬
Linkage lower inserting rod



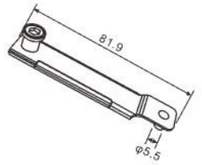


## JS-LJ2006
多点连接件
Multi-point connection part /2.5


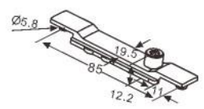


## JS-LJ2007
天地边件
Edge part /2.5


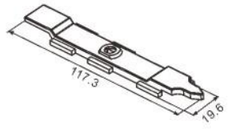


## JS-LJ2008
中长条
Middle long bar /3


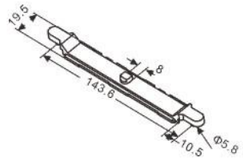


## JS-LJ2009
幕墙中连接件
Curtain middle connection part /3


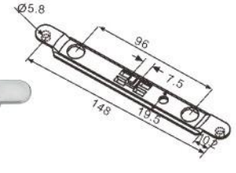


## JS-LJ2010
长连接中件
Long connection middle parts /5


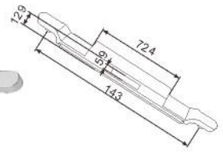






## JS-LJ2011
内开中连接件
Inward opening middle connection part /2


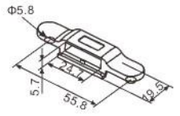


## JS-LJ2012
内开D中连接件
Inward opening D middle connection part


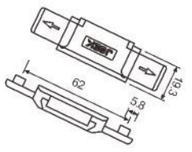


## JS-LJ2013
双向连接中件
Double-way middle connection part /3.5


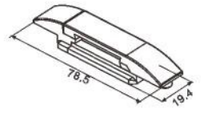


## JS-LJ2014
外开中插坑件
Outward opening middle insertion part /3.5


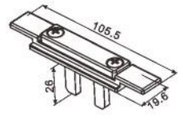


## JS-LJ2015
外开T钉中件
Outward opening T nail middle part /3.5


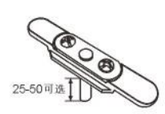


## JS-LJ2016
JS-11
T形扣
T-buckle /1.5


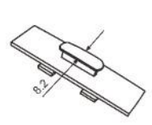


## JS-LJ2017
内开插坑中件
Inward opening middle insertion part /2


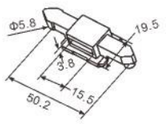


## JS-LJ2018
联动下插杆
Linkage lower inserting rod


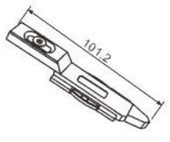


## JS-LJ2023
双开内倒插杆
Double opening horizontal pivoting window inserting rod


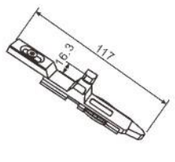


## JS-LJ2024
双向天地插杆
Double-way top and bottom inserting rod


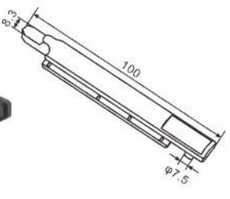

## JS-LJ2019
双向中连接配件
Double-way middle connection fitting


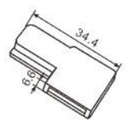


## JS-LJ2020
O连接塑料套
O connection plastic cover





## JS-LJ2021
移动锁点
Active latching point /0.9


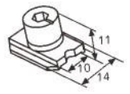


## JS-LJ2022
移动调节锁点
Moveable adjusting lock point


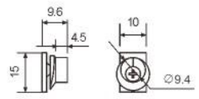


## JS-SK5001
01锁扣（高度：8mm）
Buckle /1.3


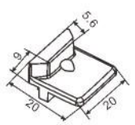


## JS-SK5002
01新锁扣
01 New buckle


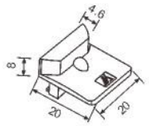


## JS-SK5003
07锁扣 （高度：8/11mm）
Buckle /1.3


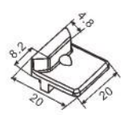


## JS-SK5004
欧标铝木锁扣
European standard aluminum-wood lock catch /1.5


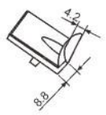


## JS-SK5005
20调节锁扣
20 adjustable lock catch /3


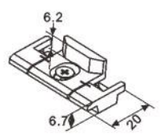


## JS-SK5006
23调节锁扣
23 adjustable lock catch /4


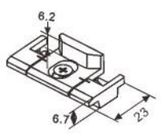






## JS-SK5007
A20调节锁扣
A 20 adjustable lock catch /4


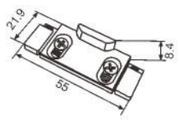


## JS-SK5008
02锁扣
Buckle /1.2


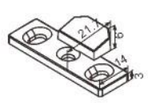


## JS-SK5009
03锁扣(高度：8/13/16mm)
Buckle /1.2





## JS-SK5010
幕墙锁扣
Curtain lock catch /1.4





## JS-SK5011
双开锁扣A
Double opening lock catch A /1.5


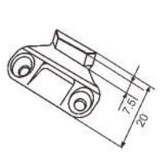


## JS-SK5012
双开锁扣B
Double opening lock catch B /1.5


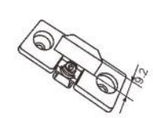


## JS-SK5013
塑钢扣
Plastic steel buckle /1


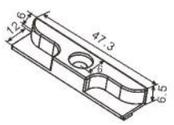


## JS-SK5014
塑钢扣
Plastic steel buckle /1


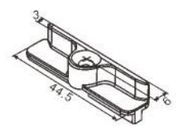


## JS-SK5015
防盗锁扣
Anti-theft lock catch /3


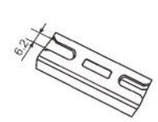


## JS-SK5016
JS-10
U形扣
U Buckle /1.5


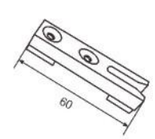

## JS-SK5017
不锈钢锁扣
Stainless steel lock catch /1.5





## JS-SK5018
不锈钢U型扣
Stainless steel U buckle


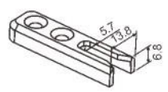


## JS-SK5019
锁座防撬
Lock seat anti-prying






## JS-SK5020
平扣双点8
Flat buckle double-point 8


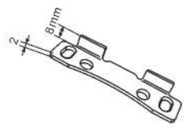


## JS-SK5021
平扣双点10
Flat buckle double-point 10


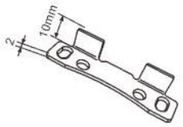


## JS-SK5022
平扣双点12
Flat buckle double-point 12


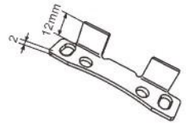


## JS-SK5023
全景钩
Panoramic hook /2


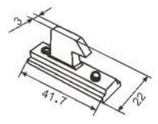


## JS-SK5024
全景扣
Panoramic buckle /2


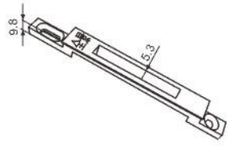


## JS-DK2001
滚轮助升器
Roller lifting booster /6


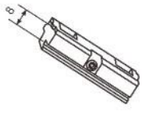


## JS-DK2002
调节助升器
Regulated rise-helping block /6


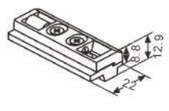






## JS-DK2003
助升器(锌合金)
Assisting ascend block (zinc alloy) /3.5


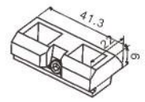


## JS-DK2004
插销锁座
Latch lock seat


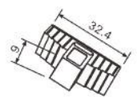


## JS-DK2005
内倒连接垫块
Horizontal pivoting window connection cushion block


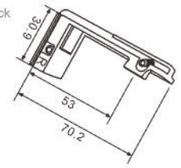


## JS-DK2006
塑料助升器
Plastic lifting booster


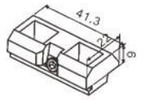


## JS-DK2007
铝木助升器
Aluminum-wood lifting booster /6


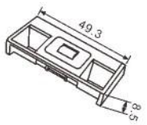


## JS-DK2008
中间锁紧扣
Middle fastening buckle /6


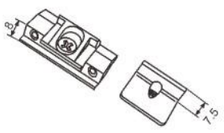


## JS-DK2009
科能塑料垫块
Keneng plastic cushion block


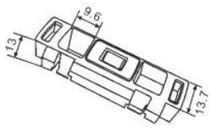


## JS-DK2010
样角扣
Corner buckle /7


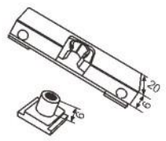


## JS-DK2011
助升块(塑料)
Assisting ascend block (plastic) /0.5


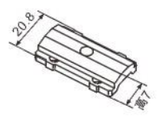


## JS-DK2012
塑料插销座
Plastic latch seat


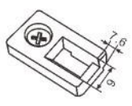


## JS-DK2013
磁吸扣
Magnetic clasp





## JS-DK2014
锁盒无基座片
Lock box base-free piece

专利产品
PATENT PRODUCT





## JS-CK561 20槽微通风系统

20 grooved micro ventilation system

NEW

| 序号 NO. | 配件名称 NAME | | 配件编号 PART NO. | 数量 QUANTITY |
|---|---|---|---|---|
| 1 | 执手 | Handle | JS-ZS816B | 1 |
| 2 | 连接边件 | Connection side parts | JS-LJ2001 | 2 |
| 3 | 07锁扣 | 07 Buckle | JS-SK5003 | 2 |
| 4 | 助升器 | Rise-helping block | JS-2006 | 1 |
| 5 | 助升块 | Assisting ascend block | JS-DK2011 | 1 |
| 6 | 微通风安全锁 | Slight ventilation safety lock | JS-FZ2906 | 1 |
| 7 | 连接中件 | Connection middle parts | JS-LJ2011 | 1 |
| 8 | 诺托90°隐藏铰链 Roto 90° invisible hinge | | JS-YX008 | 2 |

可选配 / Selected Mating



JS-ZS841 JS-ZS816B JS-ZS804 JS-ZS817 JS-ZS829 JS-ZS821

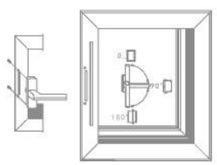

安全内外开节能微通风系统
Safety internal & external energy saving micro ventilation system

功能描述 Function Description
执手0°时，窗户处于锁闭状态
执手90°时，窗户处于微通用状态
执手180°时，窗户处于完全开启；
Handle at 0°, the window is on locking state
Handle at 90°, the window is on micro universal state
Handle at 180°, the window is on complete open state

带有安全保险锁功能
With function of safety insurance lock

安装描述 Installation Description
执手90°时将两颗固定螺丝拧紧，
再扳到平开状态，进行微通用系统
组件的调节即可。
Fasten two fixed screw while the handle is at 90°, then turn to flat open, adopts micro universal system to adjust the assembly.

注 Note 绿色标记为可供选择。
Green marking is available for choice











## JS-CK562 20槽二点锁(内开)

20 grooved two-point lock

| 序号 NO. | 配件名称 NAME | | 配件编号 PART NO. | 数量 QUANTITY |
|---|---|---|---|---|
| 1 | 内平开执手 | Swing-in handle | JS-ZS805 | 1 |
| 2 | 连接中件 | Connection middle parts | JS-LJ2011 | 1 |
| 3 | 连接边件 | Connection side parts | JS-LJ2001 | 2 |
| 4 | 07锁扣 | 07 Buckle | JS-SK5003 | 2 |
| 5 | 助升器 | Rise-helping block | JS-2006 | 1 |
| 6 | 助升块 | Assisting ascend block | JS-DK2011 | 1 |
| 7 | 228幻影铰链 | 228 Vision hinge | JS-YX002 | 2 |

可选配 / Selected Mating



JS-ZS805 JS-ZS803 JS-ZS806 JS-ZS804 JS-ZS813 JS-ZS840

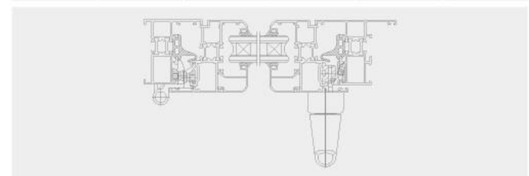

注 Note 绿色标记为可供选择。
Green marking is available for choice











## JS-CK563　20槽插坑式二点锁(内开)

20 grooved inserting two-point lock (internal open)

| 序号 NO. | 配件名称 NAME | | 配件编号 PART NO. | 数量 QUANTITY |
|---|---|---|---|---|
| 1 | 内平开执手 | Swing-in handle | JS-ZS816 | 1 |
| 2 | 连接中件 | Connection middle parts | JS-LJ2017 | 1 |
| 3 | 连接边件 | Connection side parts | JS-LJ2003 | 2 |
| 4 | 07锁扣 | 07 Buckle | JS-SK5003 | 2 |
| 5 | 助升器 | Rise-helping block | JS-DK2006 | 1 |
| 6 | 助升块 | Assisting ascend block | JS-DK2011 | 1 |
| 7 | 合页 | Hinge | JS-HY5721 | 2 |
| 8 | 二连杆(风撑) | 2-links bar (wind bracing) | JS-FC3035 | 1 |

可选配 / Selected Mating




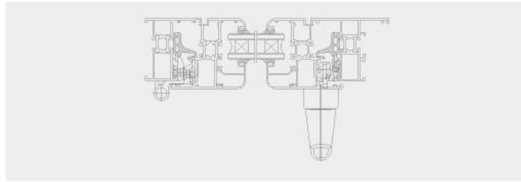

注 绿色标记为可供选择。
Green marking is available for choice

















## JS-CK564　20槽双向防撬

20 grooved bidirectional anti pry

| 序号 NO. | 配件名称 NAME | | 配件编号 PART NO. | 数量 QUANTITY |
|---|---|---|---|---|
| 1 | 内平开执手 | Swing-in handle | JS-ZS8044 | 1 |
| 2 | 双向连接中件 | Double-way middle connection part | JS-LJ2013 | 1 |
| 3 | 防盗边连接件 | Anti-theft edge connection part | JS-LJ2002 | 2 |
| 4 | 防盗锁扣 | Anti-theft lock catch | JS-SK5015 | 2 |
| 5 | 合页 | Hinge | JS-HY5724 | 2 |
| 6 | 欧式风撑 | European-style wind bracing | JS-FC3036 | 1 |

可选配 / Selected Mating




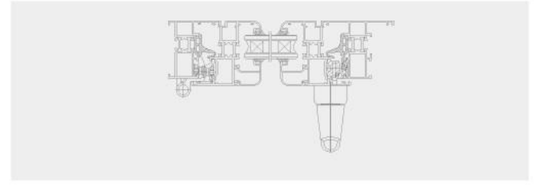

注 绿色标记为可供选择。
Green marking is available for choice









## JS-CK565 20槽内开双向二点锁

20 grooved internal open bidirectional two-point lock

| 序号 NO. | 配件名称 NAME | | 配件编号 PART NO. | 数量 QUANTITY |
|---|---|---|---|---|
| 1 | 内平开执手 | Swing-in handle | JS-ZS8055 | 1 |
| 2 | 双向连接中件 | Double-way middle connection part | JS-LJ2013 | 1 |
| 3 | 连接边件 | Connection side parts | JS-LJ2001 | 2 |
| 4 | 07锁扣 | 07 Buckle | JS-SK5003 | 2 |
| 5 | 助升器 | Rise-helping block | JS-DK2006 | 1 |
| 6 | 助升块 | Assisting ascend block | JS-DK2011 | 1 |
| 7 | 合页 | Hinge | JS-HY5719 | 2 |
| 8 | 二连杆(风撑) | 2-links bar (wind bracing) | JS-FC3035 | 1 |

可选配 / Selected Mating

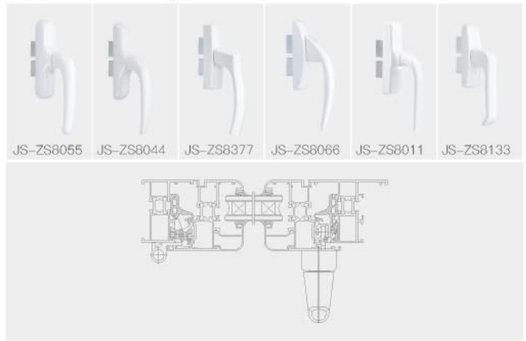


注 绿色标记为可供选择。
Note Green marking is available for choice











## JS-CK566 20槽两点天地锁(上下插销式)

20 grooved two point lock (upper & down pin)

| 序号 NO. | 配件名称 NAME | | 配件编号 PART NO. | 数量 QUANTITY |
|---|---|---|---|---|
| 1 | 内平开执手 | Swing-in handle | JS-ZS8411 | 1 |
| 2 | 双向连接中件 | Double-way middle connection part | JS-LJ2013 | 1 |
| 3 | 天地边件 | Edge part | JS-LJ2007 | 2 |
| 4 | 07锁扣 | 07 Buckle | JS-SK5003 | 2 |
| 5 | 助升块(锌合金) | Assisting ascend block (zinc alloy) | JS-DK2003 | 2 |
| 6 | 合页 | Hinge | JS-HY5707 | 2 |
| 7 | 欧式风撑 | European-style wind bracing | JS-FC3036 | 1 |

可选配 / Selected Mating

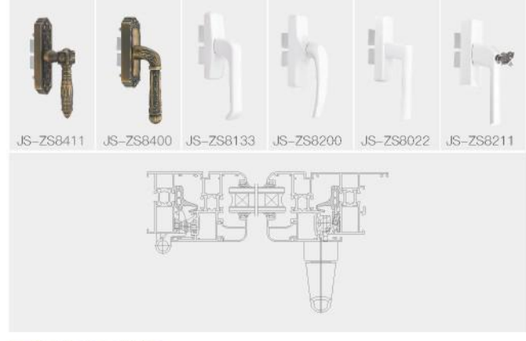


注 绿色标记为可供选择。
Note Green marking is available for choice







## JS-CK567 20槽四点锁(上下插销式)

20 grooved four point lock (upper & down pin)

| 序号 NO. | 配件名称 NAME | | 配件编号 PART NO. | 数量 QUANTITY |
|---|---|---|---|---|
| 1 | 内平开执手 | Swing-in handle | JS-ZS8344 | 1 |
| 2 | 双向连接中件 | Double-way middle connection part | JS-LJ2013 | 1 |
| 3 | 天地边件 | Edge part | JS-LJ2007 | 2 |
| 4 | 锁扣 | Buckle | JS-SK5003 | 4 |
| 5 | 助升块(锌合金) | Assisting ascend block (zinc alloy) | JS-DK2003 | 2 |
| 6 | 多点连接件 | Multipoint connecter | JS-LJ2006 | 2 |
| 7 | 中间锁紧扣 | Middle fastening buckle | JS-DK2008 | 1 |
| 8 | 合页 | Hinge | JS-HY5724 | 2 |
| 9 | 二连杆 | 2-links bar | JS-FC3033 | 1 |

可选配 / Selected Mating




注 绿色标记为可供选择。
Note Green marking is available for choice













## JS-CK568 20槽二点锁(内开)

20 grooved two-point lock (internal open)

| 序号 NO. | 配件名称 NAME | | 配件编号 PART NO. | 数量 QUANTITY |
|---|---|---|---|---|
| 1 | 内平开执手 | Swing-in handle | JS-ZS835 | 1 |
| 2 | 长连接中件 | Long connection middle parts | JS-LJ2010 | 1 |
| 3 | 连接边件 | Connection side parts | JS-LJ2001 | 2 |
| 4 | 07锁扣 | 07 Buckle | JS-SK5003 | 2 |
| 5 | 助升器 | Rise-helping block | JS-DK2006 | 1 |
| 6 | 助升块 | Assisting ascend block | JS-DK2011 | 1 |
| 7 | 中间锁紧扣 | Middle fastening buckle | JS-DK2008 | 1 |
| 8 | 合页 | Hinge | JS-HY5721 | 2 |
| 9 | 欧式风撑 | European-style wind bracing | JS-FC3036 | 1 |

可选配 / Selected Mating




注 绿色标记为可供选择。
Note Green marking is available for choice









## JS-CK569 20槽内开双向天地锁

20 rebate inward opening double-way top and bottom lock

| 序号 NO. | 配件名称 NAME | | 配件编号 PART NO. | 数量 QUANTITY |
|---|---|---|---|---|
| 1 | 内平开执手 | Swing-in handle | JS-ZS8233 | 1 |
| 2 | 双向中连接配件 | Double-way middle connection fitting | JS-LJ2019 | 1 |
| 3 | 双向天地插杆 | Double-way top and bottom inserting rod | JS-LJ2024 | 2 |
| 4 | 塑料插销座 | Plastic latch seat | JS-DK2012 | 2 |
| 5 | 合页 | Hinge | JS-HY5721 | 2 |
| 6 | 二连杆(风撑) | 2-links bar (wind bracing) | JS-FC3035 | 1 |

可选配 / Selected Mating




注 Note 绿色标记为可供选择。
Green marking is available for choice













## JS-CK570 20槽铝条式两点锁(内开)

20 grooved aluminum strips two-point lock (internal open)

| 序号 NO. | 配件名称 NAME | | 配件编号 PART NO. | 数量 QUANTITY |
|---|---|---|---|---|
| 1 | 内平开执手 | Swing-in handle | JS-ZS834 | 1 |
| 2 | 欧标铝条连件 | Europe aluminum strips connecting piece | JS-LJ403 | 1 |
| 3 | 07锁扣 | 07 Buckle | JS-SK5003 | 2 |
| 4 | 助升器 | Rise-helping block | JS-DK2011 | 1 |
| 5 | 助升块 | Assisting ascend block | JS-DK2006 | 1 |
| 6 | 合页 | Hinge | JS-HY5724 | 2 |
| 7 | 欧式风撑 | European-style wind bracing | JS-FC3036 | 1 |

可选配 / Selected Mating

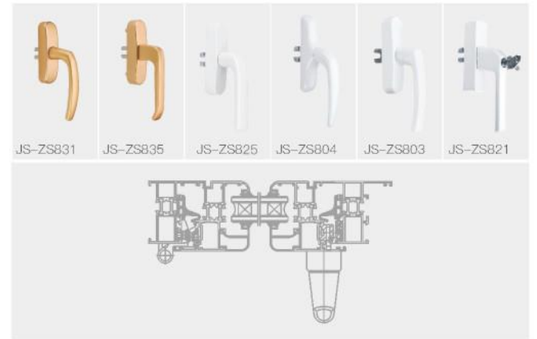


铝杆有：400、600、800、1000、1200mm多种尺寸供选择。
另铝杆可根据客户要求定做。
选用不同的铝型材，把手拔叉的长度和铝杆拔钉柱的长度有所不同。
客户在定货时请提供铝型材图纸或铝材实物便于厂家生产。

There are several sizes of aluminum rod for your choice, including 400mm,600mm,800mm, 1000mm and 1200mm,and otheers can be made according to the requirements of customers.
Different lengths of handle yoke shifter and the pull distance for the connection rod may match to different aluminum materials.
Please provide the specific aluminum material figure or reel material for the manufacturer when place an order so that we can produce with specific requirements.

注 Note 绿色标记为可供选择。
Green marking is available for choice







## JS-CK571 20槽外开插坑式二点锁

20 grooved plug hole type two-point lock

| 序号 NO. | 配件名称 NAME | | 配件编号 PART NO. | 数量 QUANTITY |
|---|---|---|---|---|
| 1 | 外平开执手 | Swing-out handle | JS-ZC838C | 1 |
| 2 | 外开中插坑件 | Outward opening middle insertion part | JS-LJ2014 | 1 |
| 3 | 连接边件 | Connection side parts | JS-2001 | 2 |
| 4 | 07锁扣 | 07 Buckle | JS-SK5003 | 2 |
| 5 | 助升器 | Rise-helping block | JS-DK2006 | 1 |
| 6 | 助升块 | Assisting ascend block | JS-DK2011 | 2 |
| 7 | 合页 | Hinge | JS-HY5733 | 2 |
| 8 | 二连杆(风撑) | 2-links bar (wind bracing) | JS-FC3035 | 1 |
| 9 | 欧标槽坠落器 | Europe grooved anti-falling device | JS-FZ901 | 1 |

可选配 / Selected Mating



JS-ZS838C JS-ZS808C JS-ZS842 JS-ZS809 JS-ZS824C JS-ZS817C



选用不同的铝型材，把手拔叉的长度和连接杆U型拔块的长度有所不同。
客户在定货时请提供铝型材图纸或铝材实物便于厂家生产。

Different lengths of handle yoke shifter and the U block length of driver may match to different aluminum materials.

Please provide the specific aluminum material figure or real material for the manufacturer when place an order so that we can produce with specific requirements.

注 Note 拔叉有多种长度选择
There are several lengths of yoke shifter for your choice

注 Note 绿色标记为可供选择。
Green marking is available for choice





## JS-CK572 20槽外开拔钉式二点锁

20 grooved pulling nail two-point lock

| 序号 NO. | 配件名称 NAME | | 配件编号 PART NO. | 数量 QUANTITY |
|---|---|---|---|---|
| 1 | 外开执手 | Swing-out handle | JS-ZS817 | 1 |
| 2 | 外开T钉中件 | Outward opening T nail middle part | JS-LJ2015 | 1 |
| 3 | 连接边件 | Connection side parts | JS-LJ2001 | 2 |
| 4 | 07锁扣 | 07 Buckle | JS-SK5003 | 2 |
| 5 | 助升器 | Rise-helping block | JS-DK2006 | 1 |
| 6 | 助升块 | Assisting ascend block | JS-DK2011 | 1 |
| 7 | 欧标槽坠落器 | Europe grooved anti-falling device | JS-FZ901 | 1 |
| 8 | 平开免铣槽四连杆 | Casement milling-free rebate four connection rods | JS-HC3035 | 2 |

可选配 / Selected Mating



JS-ZS817 JS-ZS832 JS-ZS810 JS-ZS812 JS-ZS821 JS-ZS838



选用不同的铝型材，把手拔叉的长度和连接拔钉柱的长度有所不同。
客户在定货时请提供铝型材图纸或铝材实物便于厂家生产。

Different lengths of handle yoke shifter and the pull distance of driver may match to different aluminum materials.

Please provide the specific aluminum material figure or real material for the manufacturer when place an order so that we can produce with specific requirements.

注 Note 绿色标记为可供选择。
Green marking is available for choice





## JS-CK573 20槽铝条式两点锁(外开)

20 grooved aluminum strips two-point lock (external open)

| 序号 NO. | 配件名称 NAME | | 配件编号 PART NO. | 数量 QUANTITY |
|---|---|---|---|---|
| 1 | 外开执手 | Swing-out handle | JS-ZS819 | 1 |
| 2 | 欧标铝条连件 | Europe aluminum strips connecting piece | JS-LT404 | 1 |
| 3 | 移动锁点 | Active latching point | JS-LJ2021 | 2 |
| 4 | 23调节锁扣 | 23 adjustable lock catch | JS-SK5006 | 2 |
| 5 | 欧标槽坠落器 | Europe grooved anti-falling device | JS-FZ901 | 2 |
| 6 | 平开四连杆 | Flat open four link | JS-HC3031 | 2 |

可选配 / Selected Mating



JS-ZS819 JS-ZS810 JS-ZS811 JS-ZS812 JS-ZS814 JS-ZS838

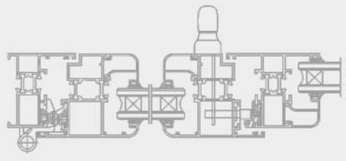

铝杆有：400、600、800、1000、1200mm多种尺寸供选择。
另铝杆可根据客户要求定做。
选用不同的铝型材，把手拔叉的长度和铝杆拔钉柱的长度有所不同。
客户在定货时请提供铝型材图纸或铝材实物便于厂家生产。

There are several sizes of aluminum rod for your choice, including 400mm,600mm,800mm,1000mm and 1200mm,and otheers can be made according to the requirements of customers.

Different lengths of handle yoke shifter and the pull distance for the connection rod may match to different aluminum materials.

Please provide the specific aluminum materiel figure or reel material for the manufacturer when place an order so that we can produce with specific requirements.

注 Note 绿色标记为可供选择。
Green marking is available for choice













## JS-CK574 国标铝条式两点锁(外开)

National aluminum strips two-point lock (external open)

| 序号 NO. | 配件名称 NAME | | 配件编号 PART NO. | 数量 QUANTITY |
|---|---|---|---|---|
| 1 | 外开执手 | Swing-out handle | JS-ZS808 | 1 |
| 2 | 铝条 | Aluminum rod | JS-LT406 | 1 |
| 3 | 03锁扣 | 03 Buckle | JS-SK5009 | 2 |
| 4 | 欧标槽坠落器 | Europe grooved anti-falling device | JS-FZ901 | 1 |
| 5 | 平开四连杆 | Flat open four link | JS-HC3031 | 2 |

可选配 / Selected Mating



JS-ZS808 JS-ZS810 JS-ZS811 JS-ZS812 JS-ZS838 JS-ZS817

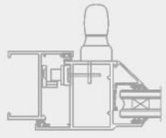

铝杆有：400、600、800、1000、1200mm多种尺寸供选择。
另铝杆可根据客户要求定做。
选用不同的铝型材，把手拔叉的长度和铝杆拔钉柱的长度有所不同。
客户在定货时请提供铝型材图纸或铝材实物便于厂家生产。

There are several sizes of aluminum rod for your choice, including 400mm,600mm,800mm,1000mm and 1200mm,and otheers can be made according to the requirements of customers.

Different lengths of handle yoke shifter and the pull distance for the connection rod may match to different aluminum materials.

Please provide the specific aluminum materiel figure or reel material for the menufecturer when place an order so that we can produce with specific requirements.

注 Note 绿色标记为可供选择。
Green marking is available for choice









## JS-CK575 国标铝条式两点锁外开(插坑)

National aluminum strips two-point lock (external open/plug hole)

| 序 号 NO. | 配件名称 NAME | | 配件编号 PART NO. | 数 量 QUANTITY |
|---|---|---|---|---|
| 1 | 外平开执手 | Swing-out handle | JS-ZS810 | 1 |
| 2 | 铝条 | Aluminum rod | JS-LT409 | 1 |
| 3 | 锁扣 | Buckle | JS-SK5008 | 2 |
| 4 | 欧标槽坠落器 | Europe grooved anti-falling device | JS-FZ901 | 1 |
| 5 | 合页 | Hinge | JS-HY5732 | 2 |

可选配 / Selected Mating



JS-ZS810 JS-ZS811 JS-ZS812 JS-ZS814 JS-ZS8022 JS-ZS817

铝杆有：400、600、800、1000、1200mm多种尺寸供选择。
另铝杆可根据客户要求定做。
选用不同的铝型材，把手拔叉的长度和铝杆拔钉柱的长度有所不同。
客户在定货时请提供铝型材图纸或铝材实物便于厂家生产。

There are several sizes of aluminum rod for your choice, including 400mm,600mm,800mm,1000mm and 1200mm,and otheers can be made according to the requirements of customers.

Different lengths of handle yoke shifter and the pull distance for the connection rod mey match to different aluminum materials.

Please provide the specific aluminum materiel figure or reel material for the manufacturer when place an order so that we can produce with specific requirements.

注 note 绿色标记为可供选择。
Green marking is available for choice





5









## JS-CK576国标推拉门窗两点锁

National sliding door or window two-point lock

| 序 号 NO. | 配件名称 NAME | | 配件编号 PART NO. | 数 量 QUANTITY |
|---|---|---|---|---|
| 1 | 外平开执手 | Swing-out handle | JS-ZS821 | 1 |
| 2 | 铝条 | Aluminum rod | JS-LT410 | 1 |
| 3 | 不锈钢U型扣 | Stainless steel U buckle | JS-SK5018 | 2 |
| 4 | 合页 | Hinge | JS-HY5732 | 2 |

可选配 / Selected Mating



JS-ZS821 JS-ZS838 JS-ZS829 JS-ZS817 JS-ZS839 JS-ZS843

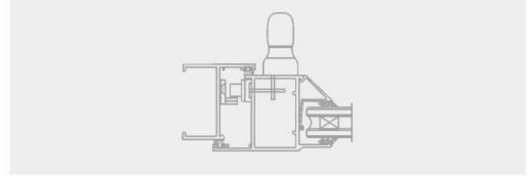

铝杆有：400、600、800、1000、1200mm多种尺寸供选择。
另铝杆可根据客户要求定做。
选用不同的铝型材，把手拔叉的长度和铝杆拔钉柱的长度有所不同。
客户在定货时请提供铝型材图纸或铝材实物便于厂家生产。

There are several sizes of aluminum rod for your choice, including 400mm,600mm,800mm,1000mm and 1200mm,and otheers can be made according to the requirements of customers.

Different lengths of handle yoke shifter and the pull distance for the connection rod mey match to different aluminum materials.

Please provide the specific aluminum materiel figure or reel materiel for the manufacturer when place an order so that we can produce with specific requirements.

注 note 绿色标记为可供选择。
Green marking is available for choice



4






## JS-CK577 20槽拔钉式二点锁

20 rebate nail type two-point lock

| 序号 NO. | 配件名称 NAME | | 配件编号 PART NO. | 数量 QUANTITY |
|---|---|---|---|---|
| 1 | 执手 | Handle | JS-SG8052 | 1 |
| 2 | 外开T钉中件 | Outward opening T nail middle part | JS-LJ2015 | 1 |
| 3 | 连接边件 | Connection side parts | JS-LJ2001 | 2 |
| 4 | 锁扣 | Buckle | JS-SK5003 | 2 |
| 5 | 助升器 | Rise-helping block | JS-DK2006 | 1 |
| 6 | 助升块 | Assisting ascend block | JS-DK2011 | 2 |
| 7 | 229助力隐藏铰链<br>229 boosting invisible hinge | | JS-YX003 | 2 |

可选配 / Selected Mating




选用不同的铝型材，把手拔叉的长度和连接拔钉柱的长度有所不同。
客户在定货时请提供铝型材图纸或铝材实物便于厂家生产。

Different lengths of handle yoke shifter and the pull distance of driver may match to different aluminum materials.
Please provide the specific aluminum meterial figure or reel meterial for the manufacturer when place an order so that we can produce with specific requirements.

注 绿色标记为可供选择。
Note Green marking is available for choice
















## JS-CK578 55/65/70双外开

55/65/70 double outward opening

| 序号 NO. | 配件名称 NAME | | 配件编号 PART NO. | 数量 QUANTITY |
|---|---|---|---|---|
| 1 | 广式大座执手(内外开)<br>Cantonese style large base handle (Internal+external open) | | JS-ZS833 | 1 |
| 2 | 铝杆 | Aluminum pole | JS-LT413 | 1 |
| 3 | 锁扣A | Buckle A | JS-SK5011 | 2 |
| 4 | 锁扣B | Buckle B | JS-SK5012 | 2 |
| 5 | 65锁勾 | Latch lock | JS-65 | 1 |
| 6 | 65双外开合页 | Hinge | JS-HY5747 | 2 |
| 7 | 欧标槽坠落器<br>Europe grooved anti-falling device | | JS-FZ901 | 1 |
| 8 | 二连杆 | 2-links bar | JS-FC3033 | 1 |

可选配 / Selected Mating




铝杆有：400、600、800、1000、1200mm多种尺寸供选择。
另铝杆可根据客户要求定做。
选用不同的铝型材，把手拔叉的长度和铝杆拔钉柱的长度有所不同。
客户在定货时请提供铝型材图纸或铝材实物便于厂家生产。

There are several sizes of aluminum rod for your choice, including 400mm,600mm,800mm,1000mm and 1200mm,and otheers can be made according to the requirements of customers.
Different lengths of handle yoke shifter and the pull distance for the connection rod may match to different aluminum materials.
Please provide the specific aluminum meterial figure or reel meterial for the manufacturer when place an order so that we can produce with specific requirements.

注 绿色标记为可供选择。
Note Green marking is available for choice






## JS-CK579 平槽方钢二点锁

Flat grooved steel two-point lock / 50

| 序号 NO. | 配件名称 NAME | | 配件编号 PART NO. | 数量 QUANTITY |
|---|---|---|---|---|
| 1 | 执手 | Handle | JS-SH8031 | 1 |
| 2 | 锁盒 | Lock box | JS-SH1005 | 1 |
| 3 | 防盗边连接件 | Anti-theft edge connection part | JS-LJ2002 | 2 |
| 4 | 防盗锁扣 | Anti-theft lock catch | JS-SK5015 | 2 |

注 Note 绿色标记为可供选择。
Green marking is available for choice






JS-SG8031 JS-SG8033

## JS-CK580 欧标槽二点锁

Europe grooved two-point lock / 50

| 序号 NO. | 配件名称 NAME | | 配件编号 PART NO. | 数量 QUANTITY |
|---|---|---|---|---|
| 1 | 执手 | handle | JS-SG8017 | 1 |
| 2 | 锁盒 | Lock box | JS-SH1006 | 1 |
| 3 | 连接铝杆 | Connecting aluminum rod | JS-LJ405 | 2 |
| 4 | 07锁扣 | 07 Buckle | JS-SK5003 | 2 |






JS-SG8017 JS-SG8039





## JS-CK581 欧标式方钢二点锁

Europe steel two-point lock / 喷塑35

| 序号 NO. | 配件名称 NAME | | 配件编号 PART NO. | 数量 QUANTITY |
|---|---|---|---|---|
| 1 | 剑式执手 | Sword handle | JS-SG8022 | 1 |
| 2 | 锁盒 | Lock box | JS-SH1003 | 1 |
| 3 | 边锁件 | Side lock parts | JS-LJ2001 | 2 |
| 4 | 07锁扣 | 07 Buckle | JS-SK5003 | 2 |

注 Note 绿色标记为可供选择。
Green marking is available for choice






JS-SG8022 JS-SG8029

## JS-CK582 方钢式二点锁

Square steel two-point lock /喷塑 35

| 序号 NO. | 配件名称 NAME | | 配件编号 PART NO. | 数量 QUANTITY |
|---|---|---|---|---|
| 1 | 隐形执手 | Invisible handle | JS-SG8054 | 1 |
| 2 | 锁盒 | Lock box | JS-SH1004 | 1 |
| 3 | T形扣 | T-buckle | JS-LJ2016 | 2 |
| 4 | U形扣 | U Buckle | JS-SK5016 | 2 |






JS-SG8054 JS-SG8053

# INWARD AND OUTWARD OPENING STAINLESS STEEL MESH INTEGRAL FITTING

外内开金钢网一体配件

## JS-CK583 外开玻璃扇配件

Outward opening glass leaf fitting

| 序号 NO. | 配件名称 NAME | | 配件编号 PART NO. | 数量 QUANTITY |
|---|---|---|---|---|
| 1 | 奔驰弯执手 | Benz bent handle | JS-SG8068 | 1 |
| 2 | 不锈钢锁盒 | Stainless steel lock box | JS-SH1035 | 1 |
| 3 | 边连接件 | Edge connection part | JS-LJ2001 | 2 |
| 4 | 01新锁扣 | 01 New buckle | JS-SK5002 | 2 |
| 5 | 6.0防尘铰链 | 6.0 dustproof hinge | JS-HC3038 | 2 |

注 绿色标记为可供选择。
Green marking is available for choice

## JS-CK584 内金钢网纱窗配件

Inward stainless steel mesh screen window fitting

| 序号 NO. | 配件名称 NAME | | 配件编号 PART NO. | 数量 QUANTITY |
|---|---|---|---|---|
| 1 | 奔驰方轴执手 | Benz square shaft handle | JS-SG8043 | 1 |
| 2 | 不锈钢锁盒 | Stainless steel lock box | JS-SH1031 | 1 |
| 3 | 边件防撬 | Edge part anti-prying | JS-LJ2005 | 2 |
| 4 | 锁座防撬 | Lock seat anti-prying | JS-SK5019 | 2 |
| 5 | 纱窗铰链 | Screen window hinge | JS-YX012 | 2 |







# DOUBLE INWARD OPENING STAINLESS STEEL MESH INTEGRAL FITTING

双内开金钢网一体配件

## JS-CK585 内开纱窗配件

Inward opening screen window fitting

| 序号 NO. | 配件名称 NAME | | 配件编号 PART NO. | 数量 QUANTITY |
|---|---|---|---|---|
| 1 | 弹锁 | Spring lock | JS-SG8055 | 1 |
| 2 | 铝条 | Aluminum string | JS-LT404 | 1 |
| 3 | 01新锁扣 | 01 New buckle | JS-SK5002 | 2 |
| 4 | 纱窗秒拆合页 Screen window quick disassembled hinge | | JS-YX010 | 2 |

注 绿色标记为可供选择。
Green marking is available for choice

## JS-CK586 内开内倒配件

Horizontal pivoting window fitting

| 序号 NO. | 配件名称 NAME | | 配件编号 PART NO. | 数量 QUANTITY |
|---|---|---|---|---|
| 1 | 执手 | Handle | JS-ZS855 | 1 |
| 2 | D8中连接件 | D8 middle connection part | JS-LJ2012 | 1 |
| 3 | 01新锁扣 | 01 New buckle | JS-SK5002 | 2 |
| 4 | 调节转角器 | Adjusting diverter | JS-ZJ306 | 1 |
| 5 | 斜拉杆 | Diagonal member | JS-ND229 | 1 |
| 6 | 防脱器 | Fallout preventer | JS-221B | 1 |
| 7 | 容错插杆支撑 | Fault tolerant inserting rod support | JS-CX223 | 1 |
| 8 | 滚轮助升器 | Roller lifting booster | JS-DK2001 | 1 |
| 9 | 隐藏铰链 | Invisible hinge | JS-ND229 | 1 |







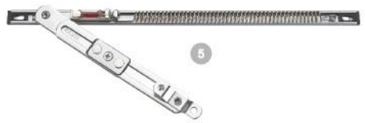



## JS-CK587 防火窗内开配件

Fireproof window inward opening fitting

| 序号 NO. | 配件名称 NAME | | 配件编号 PART NO. | 数量 QUANTITY |
|---|---|---|---|---|
| 1 | 奔驰E内开执手 | Benz E inward opening handle | JS-ZS851 | 1 |
| 2 | 不锈钢防火内开铝条 | Stainless steel fireproof inward opening aluminum bar | JS-LT409 | 1 |
| 3 | 锁扣 | Buckle | JS-5019A | 2 |
| 4 | 不锈钢防火合页 | Stainless steel fireproof hinge | JS-HY5715 | 2 |
| 5 | 防火风撑 | Fireproof wind bracing | JS-FC3041 | 1 |

铝杆有：400、600、800、1000、1200mm多种尺寸供选择。
另铝杆可根据客户要求定做。
选用不同的铝型材，把手拔叉的长度和铝杆拔钉柱的长度有所不同。
客户在定货时请提供铝型材图纸或铝材实物便于厂家生产。

There are several sizes of aluminum rod for your choice, including 400mm,600mm,800mm,1000mm and 1200mm,and otheers can be made according to the requirements of customers.

Different lengths of handle yoke shifter and the pull distance for the connection rod may match to different aluminum materials.

Please provide the specific aluminum meteriel figure or reel meteriel for the menufecturer when place an order so that we can produce with specific requirements.

注 Note 绿色标记为可供选择。
Green marking is available for choice













## JS-CK5858 防火窗外开配件

Fireproof outward opening fitting

| 序号 NO. | 配件名称 NAME | | 配件编号 PART NO. | 数量 QUANTITY |
|---|---|---|---|---|
| 1 | 幻影外开执手 | Fireproof wind bracing | JS-ZS852 | 1 |
| 2 | 不锈钢防火外开铝条 | Stainless steel fireproof inward opening aluminum bar | JS-LT416 | 1 |
| 3 | 锁扣 | Buckle | JS-5019A | 2 |
| 4 | 防火铰链 | Fireproof hinge | JS-YX006 | 2 |
| 5 | 防火风撑 | Fireproof wind bracing | JS-FC3041 | 1 |
| 6 | 不锈钢防坠落器 | Stainless steel fall preventer | JS-FZ905 | 1 |

铝杆有：400、600、800、1000、1200mm多种尺寸供选择。
另铝杆可根据客户要求定做。
选用不同的铝型材，把手拔叉的长度和铝杆拔钉柱的长度有所不同。
客户在定货时请提供铝型材图纸或铝材实物便于厂家生产。

There are several sizes of aluminum rod for your choice, including 400mm,600mm,800mm,1000mm and 1200mm,and otheers can be made according to the requirements of customers.

Different lengths of handle yoke shifter and the pull distance for the connection rod may match to different aluminum materials.

Please provide the specific aluminum meteriel figure or reel meteriel for the menufecturer when place an order so that we can produce with specific requirements.

注 Note 绿色标记为可供选择。
Green marking is available for choice





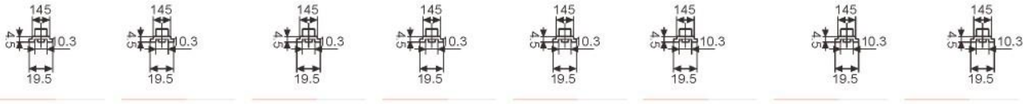


**JS-LT401**
欧标幕墙
(直插式)铝条
方槽4×16
或4×24
European standard curtain wall (plug-in) aluminum string Square groove 4X16 or 4X24

**JS-LT402**
欧标幕墙外开
(插坑式)铝条
European standard curtainwall (inserted pit type) aluminum string

**JS-LT403**
欧标内开
(拨钉式)铝条
European internal open (nail extraction ype) aluminum string

**JS-LT404**
欧标外开
(拨钉式)铝条
European standard (nailextraction type) aluminum string

**JS-LT405**
欧标
(挂式)铝条
European standard (hangg type) aluminum string

**JS-LT413**
欧标双开
铝条
European standard double opening aluminum bar

**JS-LT415**
不锈钢防火
内开铝条
Stainless steel inward opening aluminum bar

**JS-LT416**
不锈钢防火
外开铝条
Stainless steel inward opening aluminum bar

B.D.BB.C.TL.AB宽度分14mm，16mm。
20E.20D.20B.20A宽度分20mm，23mm。
规格400mm/7，600mm/7.8，800/9.2mm，1000/10.3mm，1200/11.5mm，1400mm/12.7尺寸可供选择。
另连接铝条可根据客户要求定做。










**JS-LT406**
14mm/16mm
平槽两点
(拔钉式)铝条
plain groove two-point (nail extraction type) aluminum string

**JS-LT407**
14mm/16mm
平槽(插坑式)
铝条
Plain groove (inserted pit type) aluminum string

**JS-LT408**
14mm/16mm
平槽(拔钉式)
铝条
Plain groove (nail extraction type) aluminum string

**JS-LT409**
14mm/16mm
中两点(直插式)铝条
方槽4×16或4×24
Medium two-point (plug-in type) aluminum string Square groove 4X16 or 4X24

**JS-LT410**
14mm/16mm
推拉(拔钉式)铝条
Push-pull (nail extraction type)aluminum sting

**JS-LT411**
14mm/16mm
平槽两点(挂式)铝条
Plain groove two-point (hang type) aluminum string

There are width of 14mm and 16mm for B.D.BB.C.TL.AB
There are width of 20mm and 23mm for 20E. 20D.20B.20A
There are specifications of 400mm, 600mm, 800mm, 1000mm, 1200mm and 1400mm for your choice.
The connection aluminum bars can be made according to the requirements of customers.




## JS-MS576 多点平开门锁(双向)

Multi point flat open door lock (two way)

| 序号 NO. | 配件名称 NAME | | 配件编号 PART NO. | 数量 QUANTITY | 备注 REMARKS |
|---|---|---|---|---|---|
| 1 | 锁体 | Lock body | JS-ST8576 | 1 | |
| 2 | 调节门扣板 | Adjusting door pinch plate | JS-MK10 | 1 | |
| 3 | 连接边件 | Connection side parts | JS-LJ2001 | 2 | |
| 4 | 锁扣 | Buckle | JS-SK5003 | 2 | |
| 5 | 插销销座 | Latch seat | JS-DK2004 | 2 | |
| 6 | 联动下插杆 | Linkage lower inserting rod | JS-W2018 | 2 | |
| 7 | 联动执手 | Linkage handle | JS-CX3056 | 1 | |

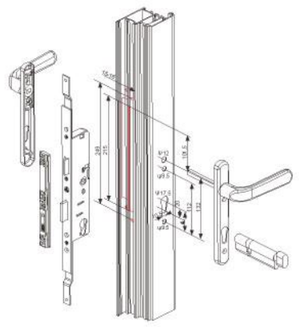

对开门型材通用，可做门可做窗（注意中挺双槽口）

Universal split door section bars, can be used for doors and windows
(pay attention to the middle rail double rebate)

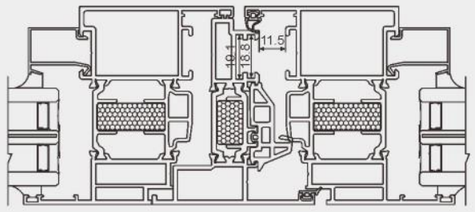


客户可据图册执手系列选配其他执手，合页系列先配其他合页；
本配置仅供参考，具体配置宜根据型材及窗规格而定；

Customers can select other handles and hinges according to figure.
This allocation is only for reference, the specific configuration shall be determined according to section bar and window specification.

注 Note 绿色标记为可供选择。
Green marking is available for choice





## JS-MS8658

23×25锁体
平开通道门锁
Flat open doorway lock / 喷塑50



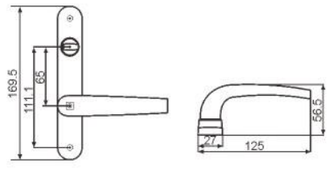


方杆长度=型材厚度+28
螺丝长度=型材厚度+16
Square bar length = profile thickness +28
Screw length = profile thickness +16

## JS-MS8659

塑钢门锁
Plastic steel lock / 喷塑75



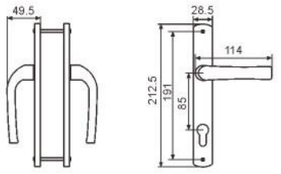


方杆长度=型材厚度+28
螺丝长度=型材厚度+16
Square bar length = profile thickness +28
Screw length = profile thickness +16

## JS-MS8656

大柄门锁
Large handle door lock / 喷塑80



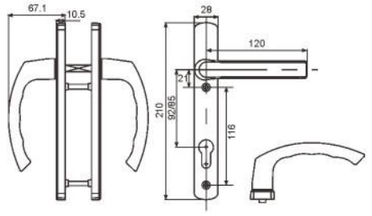


方杆长度=型材厚度+28
螺丝长度=型材厚度+16
Square bar length = profile thickness +28
Screw length = profile thickness +16

## JS-MS8668

博方门锁
Bofang door lock / 氧化165



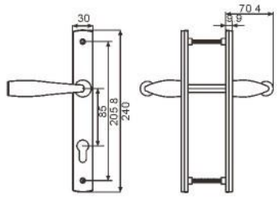


方杆长度=型材厚度+28
螺丝长度=型材厚度+16
Square bar length = profile thickness +28
Screw length = profile thickness +16

## JS-MS8651
50平开门锁（85系列）
50 casement lock(85 series) /28




方杆长度=型材厚度+38
螺丝长度=型材厚度+16
Square bar length = profile thickness +38
Screw length = profile thickness +16

## JS-MS8652
直柄门锁（85/92系列）
Straight handle lock(85/92 series) /28

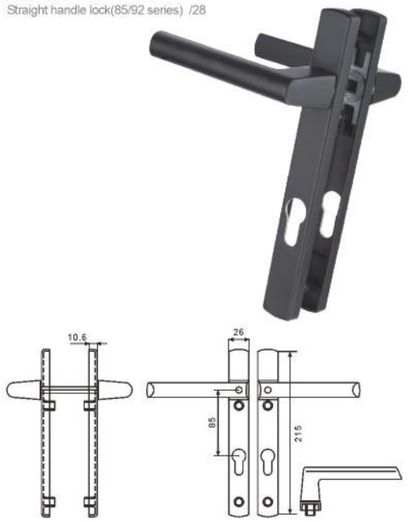


方杆长度=型材厚度+38
螺丝长度=型材厚度+16
Square bar length = profile thickness +38
Screw length = profile thickness +16

## JS-MS8653
欧式门锁（85/92系列）
European style lock(85/92 series) /28




方杆长度=型材厚度+38
螺丝长度=型材厚度+16
Square bar length = profile thickness +38
Screw length = profile thickness +16

## JS-MS8654
指纹门锁（85/92系列）
Passage lock (85/92 series) /28




方杆长度=型材厚度+28
螺丝长度=型材厚度+16
Square bar length = profile thickness +28
Screw length = profile thickness +16





## JS-MS8655
豪华门锁（85/92系列）
Luxury door lock (85/92 series) /28

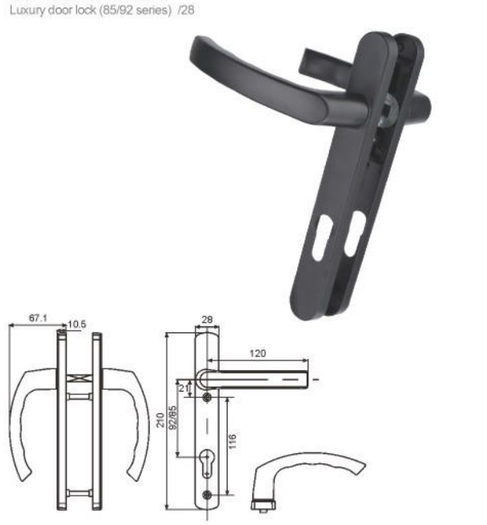


方杆长度=型材厚度+28
螺丝长度=型材厚度+16
Square bar length = profile thickness +28
Screw length = profile thickness +16

## JS-MS8656
大柄门锁（85/92系列）
Large handle lock (85/92 series) /28




方杆长度=型材厚度+28
螺丝长度=型材厚度+16
Square bar length = profile thickness +28
Screw length = profile thickness +16

## JS-MS8649
德式门锁
German style door lock /32

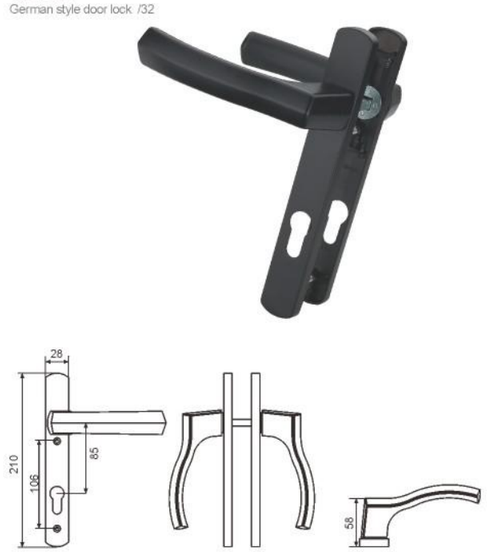


方杆长度=型材厚度+28
螺丝长度=型材厚度+16
Square bar length = profile thickness +28
Screw length = profile thickness +16

## JS-MS8650
德式加长门锁
German style prolonged door lock /35

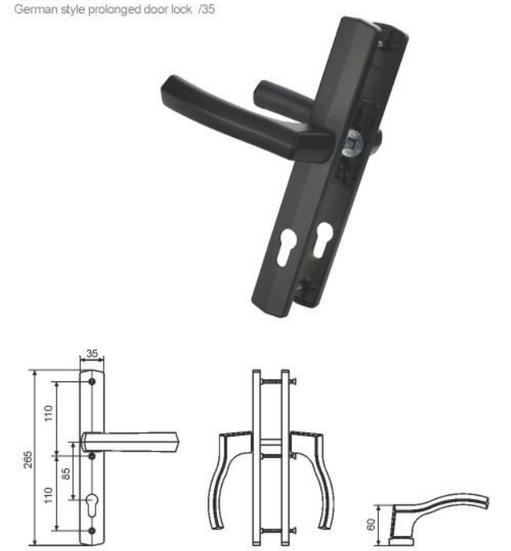


方杆长度=型材厚度+28
螺丝长度=型材厚度+16
Square bar length = profile thickness +28
Screw length = profile thickness +16

## JS-MS8648
剑式高低门锁
Sword type high-low door lock 喷塑30/喷漆35



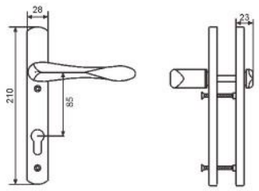


方杆长度=型材厚度+38
螺丝长度=型材厚度+16
Square bar length = profile thickness +38
Screw length = profile thickness +16

## JS-MS8661
大柄高低门锁
Large handle high-low door lock 喷塑30/喷漆35



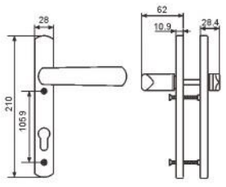


方杆长度=型材厚度+38
螺丝长度=型材厚度+16
Square bar length = profile thickness +38
Screw length = profile thickness +16

## JS-MS8662
意式门锁
Italian style door lock / 氧化75



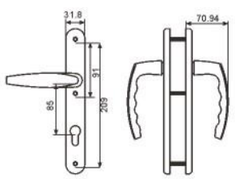


方杆长度=型材厚度+38
螺丝长度=型材厚度+16
Square bar length = profile thickness +38
Screw length = profile thickness +16

## JS-MS8663
博士门锁
Bosch door lock/ 氧化75



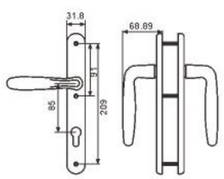


方杆长度=型材厚度+28
螺丝长度=型材厚度+16
Square bar length = profile thickness +28
Screw length = profile thickness +16





## JS-MS8664
欧洲高低门锁
European high-low door lock / 氧化85



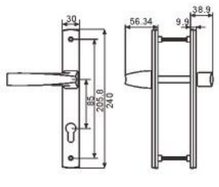


方杆长度=型材厚度+28
螺丝长度=型材厚度+16
Square bar length = profile thickness +28
Screw length = profile thickness +16

## JS-MS8665
博美门锁
Bomei door lock / 氧化80



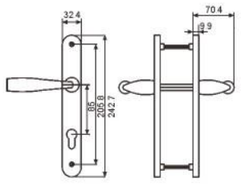


方杆长度=型材厚度+28
螺丝长度=型材厚度+16
Square bar length = profile thickness +28
Screw length = profile thickness +16

## JS-MS8666
圆柄门锁
Round handle door lock /喷塑28



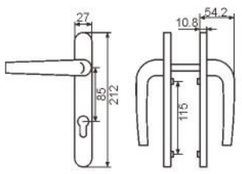


方杆长度=型材厚度+28
螺丝长度=型材厚度+16
Square bar length = profile thickness +28
Screw length = profile thickness +16

## JS-MS8667
方正门锁
Fangzheng door lock / 氧化85



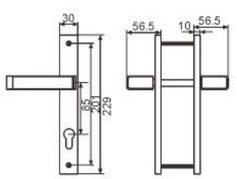


方杆长度=型材厚度+28
螺丝长度=型材厚度+16
Square bar length = profile thickness +28
Screw length = profile thickness +16

## JS-MS8668
博方门锁
Bofang door lock /氧化85



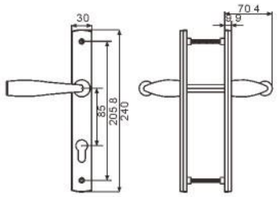


方杆长度=型材厚度+38
螺丝长度=型材厚度+16
Square bar length = profile thickness +38
Screw length = profile thickness +16

## JS-MS8669
欧洲门锁
European door lock / 氧化85



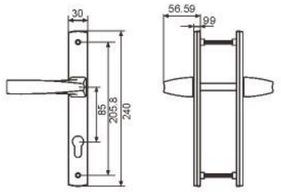


方杆长度=型材厚度+38
螺丝长度=型材厚度+16
Square bar length = profile thickness +38
Screw length = profile thickness +16

## JS-MS8647
中式门锁(锌合金)
Chinese style door lock / 门 门 90



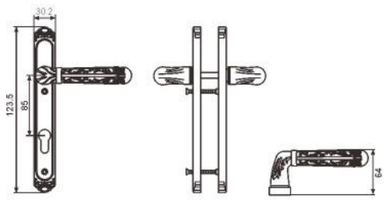


方杆长度=型材厚度+38
螺丝长度=型材厚度+16
Square bar length = profile thickness +38
Screw length = profile thickness +16

## JS-MS8670
芬兰门锁(纯铜)
Finnish door lock pure copper / 纯铜330



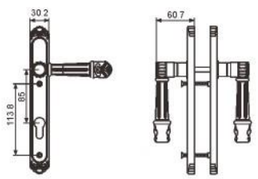


方杆长度=型材厚度+28
螺丝长度=型材厚度+16
Square bar length = profile thickness +28
Screw length = profile thickness +16





## JS-MS8671
实心门锁
Solid door lock



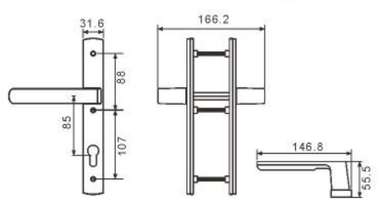


方杆长度=型材厚度+38
螺丝长度=型材厚度+16
Square bar length = profile thickness +38
Screw length = profile thickness +16

## JS-MS8672
港式门锁
Hong Kong style door lock /喷塑30



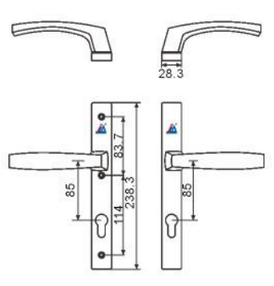


指纹开门、密码开门、钥匙开门
304不锈钢产品、防水防冻
Opening by fingerprint, opening by password, opening by key
304 stainless steel product, waterproof and anti-freezing

## JS-MS8673
奔驰门锁
Benz door lock /喷塑30



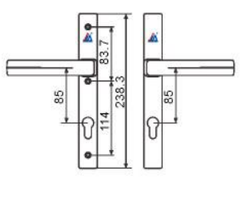


方杆长度=型材厚度+28
螺丝长度=型材厚度+16
Square bar length = profile thickness +28
Screw length = profile thickness +16

## JS-MS8674
幻影门锁
Vision door lock /喷塑30



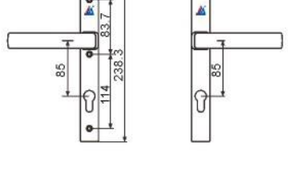


方杆长度=型材厚度+28
螺丝长度=型材厚度+16
Square bar length = profile thickness +28
Screw length = profile thickness +16

## JS-ZN8675
指纹密码锁
(黑灰色)

Fingerprint password lock
(black grey) / 900



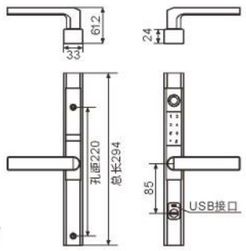


功能:
指纹识别、刷卡解锁、密码锁、钥匙开门、
远程临时密码、 防水防冻、USB外电接口

Functions:
fingerprint recognition,
card swiping to unlock password lock,
door opening with keys, remote temporary
password, Waterproof and anti-freeze,
USB peripheral interfaces

## JS-ZN8675
指纹密码锁
(金色)

Fingerprint password lock
(gold)/ 900



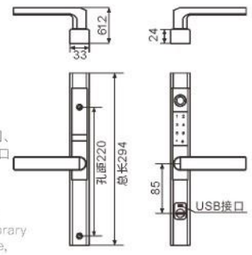


功能:
指纹识别、刷卡解锁、密码锁、钥匙开门、
远程临时密码、 防水防冻、USB外电接口

Functions:
fingerprint recognition,
card swiping to unlock password lock,
door opening with keys, remote temporary
password, Waterproof and anti-freeze,
USB peripheral interfaces

## JS-ZN8675
指纹密码锁
(银色)

Fingerprint password lock
(silver) / 900



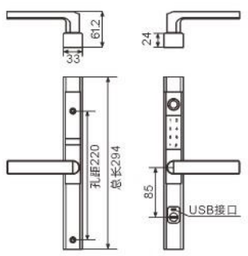


功能:
指纹识别、刷卡解锁、密码锁、钥匙开门、
远程临时密码、 防水防冻、USB外电接口



Functions:
fingerprint recognition, card swiping to unlock password lock,
door opening with keys, remote temporary password, Waterproof
and anti-freeze, USB peripheral interfaces





JS-CK578 平开门锁
Flat open door lock

## JS-MS8660
直柄对开带锁(7x7方轴)
Straight handle split lock
(7x7 square shaft)



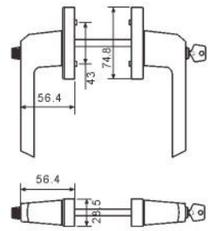


## JS-MS8657
弓型分体门锁(8x8方轴)
Bow door lock
(8x8 square shaft) / 32



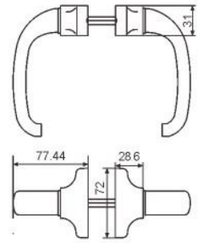


## JS-MS7676
幻影分体门锁
(8X8方轴)
Vision split door lock
(8x8 square shaft) /45



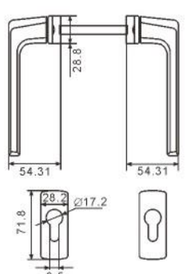


## JS-MS7677
奔驰分体门锁
(8X8方轴)
Vision split door lock
(8x8 square shaft) /45



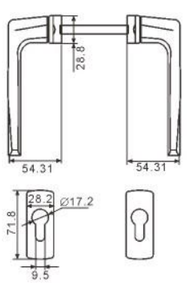

## JS-SX730
60mm正芯(双开)
60mm center core(double-opening) /23.5



## JS-SX731
70mm正芯(单开)
70mm center core(single-opening) /26.5



## JS-SX732
90mm偏芯(T60/30)单开旋扭内开
90mm eccentric (T60/30) single opening button inward opening /30



## JS-SX733
90mm偏芯(T60/30)单开旋扭外开
90mm raised core(T60/30) single external opening knob /30



## JS-SX734
90mm偏芯(60/30)AB钥匙
90mm raised core(60/30) AB key /26



## JS-SX735
120mm偏芯(T90/30)外开(青光镀铬)
120mm raised core(T90/30) outward opening (blue light chrome plating) /35



## JS-SX601
加纳锁芯盖
Ghana lock cylinder cover /6



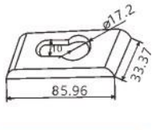


## JS-SX602
外贸锁芯盖
Foreign trade lock cylinder cover /6



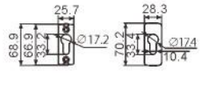






### 可选表面处理 / Optional surface treatment

T-铜拉丝
T-Brass wire drawing



G-古铜拉丝
G-Bronze wire drawing



N-镍拉丝
N-Nickel wire drawing



D-镀铬
D-Nickel plating



L-镀亮铜
L-Bright brass plating



### 可选旋钮 / Optional button

01-大圆钮
01- Optional button



02-椭圆钮
02- Oval button



03-菱形钮
03- Oval button



04-方钮
04- Square button



05-三角钮
05- Triangular button



### 可选尺寸

60锁芯
60 triangular button

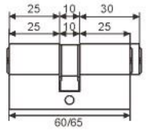


65锁芯
65 triangular button

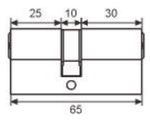


70锁芯
70 triangular button

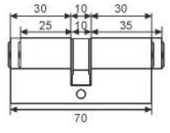


75锁芯
75 triangular button

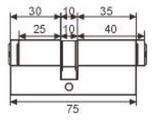


80锁芯
80 triangular button

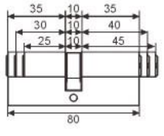


85锁芯
85 triangular button

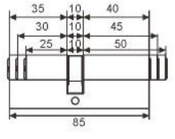


90锁芯
90 triangular button

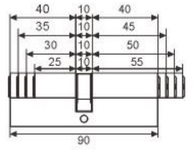


95锁芯
95 triangular button

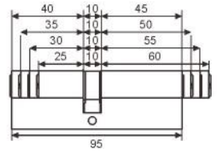


100锁芯
100 triangular button

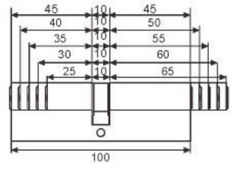


105锁芯
105 triangular button

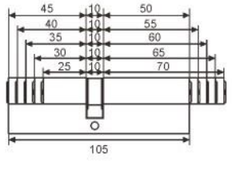


110锁芯
110 triangular button

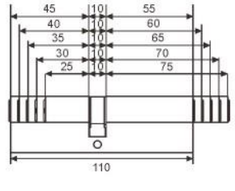


115锁芯
115 triangular button

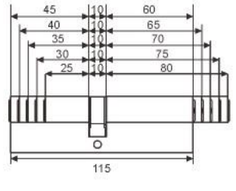


120锁芯
120 triangular button

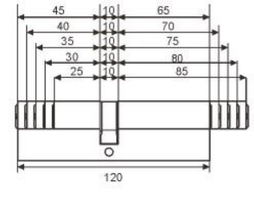

## JS-MK1
1号弯扣板
#1 bent gusset plate /3.5

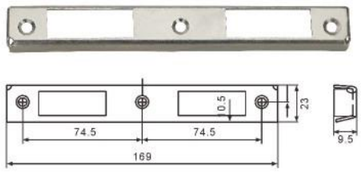


## JS-MK2
2号弯扣板
#2 bent gusset plate /3.5

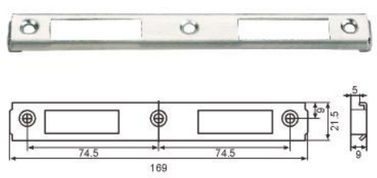


## JS-MK4
4号平扣板
4# flat buckle /3.5

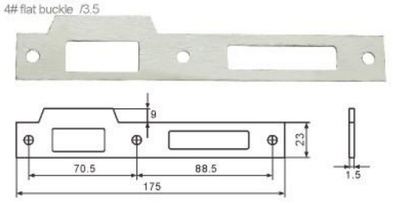


## JS-MK5
5号平扣板
5# flat buckle /3.5

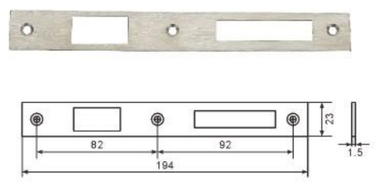


## JS-MK6
6号平扣板
6# flat buckle /8

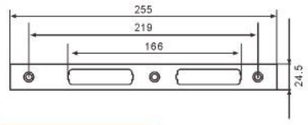


## JS-MK7
塑钢锁扣板
Plastic steel channel locking plate /3.5

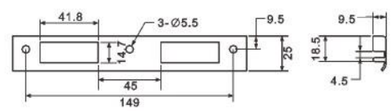


## JS-MK3
通道门锁塑钢扣
Passage door lock plastic steel buckle /3

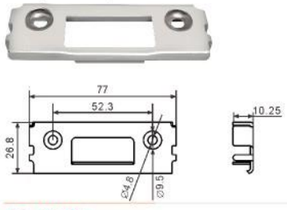


## JS-MK8
通道门锁断桥扣
Passage door lock bridge-cut buckle /3

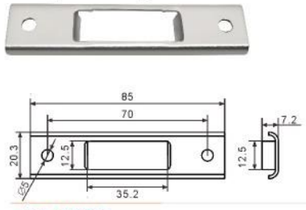


## JS-MK9
静音2号扣板
Silent 2# pinch plate /4

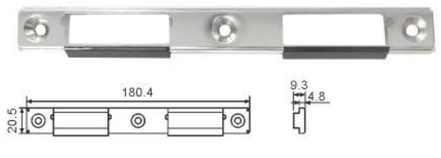


## JS-MK10
调节门扣板
Adjusting door pinch plate /10

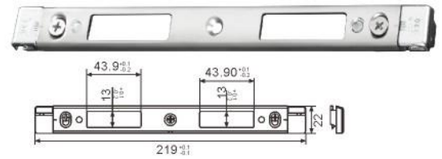






## JS-ST8562
23锁体(85×20系列)
23 lock body (85×20 series) /20

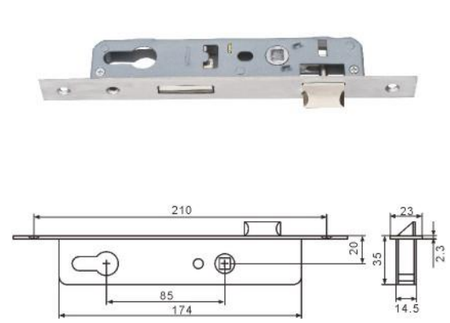


## JS-ST8563
23锁体(85×25系列)
23 lock body (85×25 series) /20

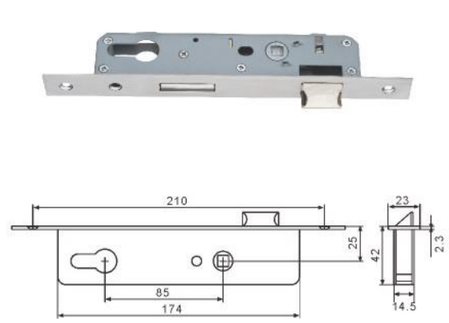


## JS-ST8564
23锁体(85×30系列)
23 lock body (85×30 series) /22.5

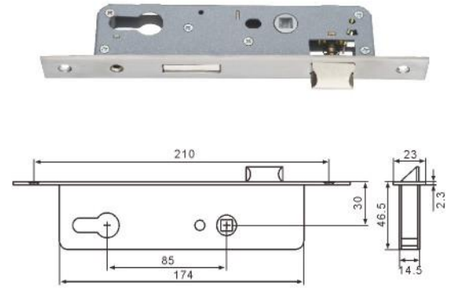


## JS-ST8565
23锁体(85×35系列)
23 lock body (85×35 series) /22.5

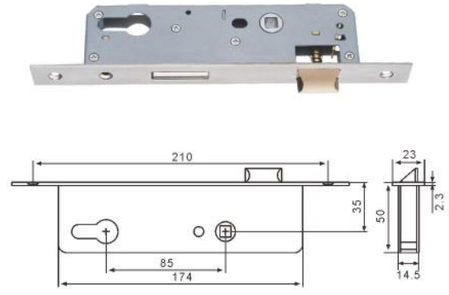


## JS-ST8576
85×40锁体
85×40 lock body /25

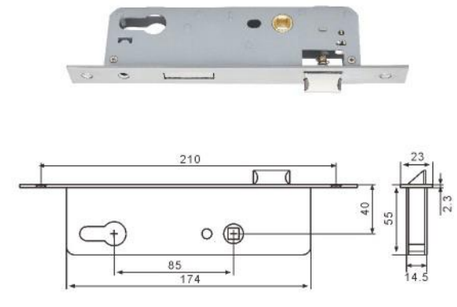


## JS-ST8575
23锁体(85×35系列)(带轴承)
23 lock body (85×35 series)(With bearing) /25

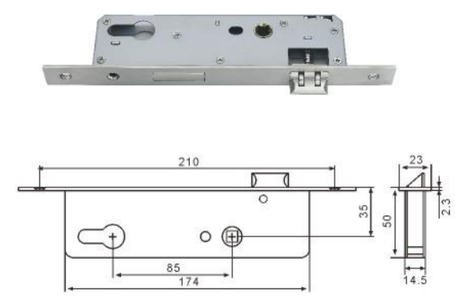

## JS-ST8566
23多点锁体(85×30系列)
23 multi-point lock body (85×30 series) /55

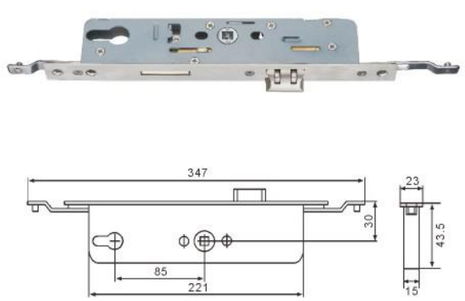


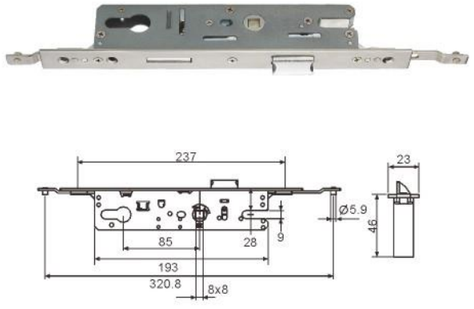


## JS-ST8567
23多点锁体(85×35系列)
23 multi-point lock body (85×35 series) /55

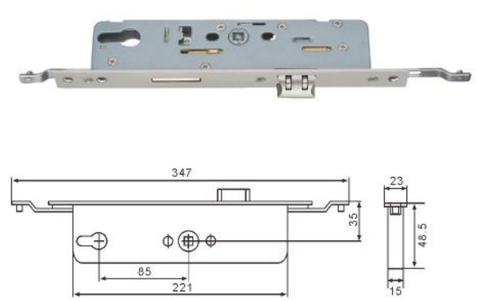


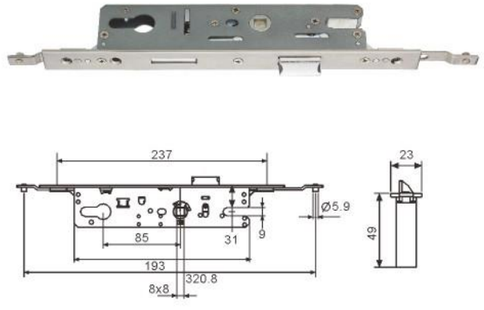


## JS-ST8568
23多点锁体(85×28系列)
23 multi-point lock body (85×28 series) /50

## JS-ST8569
23多点锁体(85×33系列)
23 multi-point lock body (85×33series) /50

## JS-ST8577
23多点锁体(85×40系列)
23 multi-point lock body (85×40series) /58

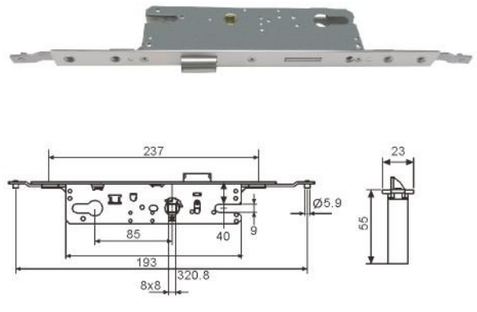


## JS-ST8578
23多点锁体(85×45系列)
23 multi-point lock body (85×45series) /58

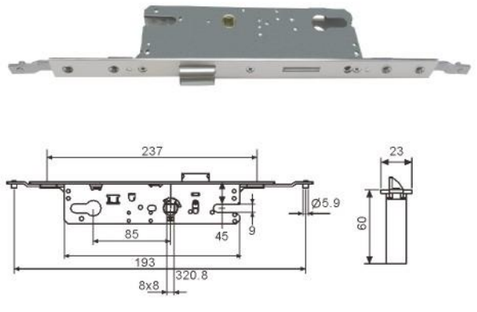






## JS-ST8570
23多点锁体(85×35系列)
23 multi-point lock body (85×35 series) /84

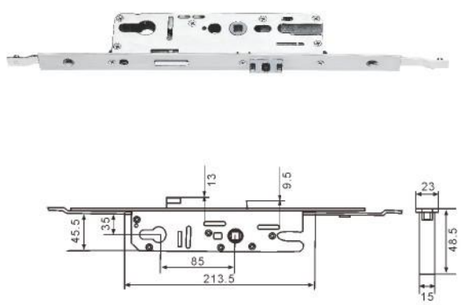


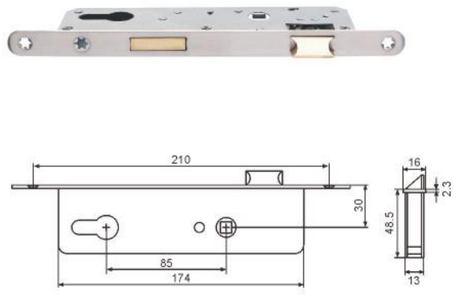


## JS-ST8571
塑钢JS-16×25mm (85)L.M
Plastic steel JS-16×25mm (85)L.M /20

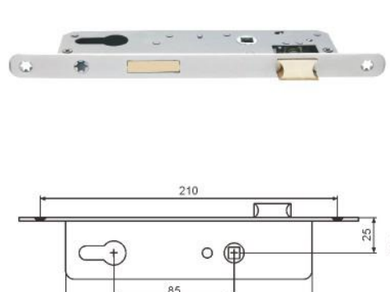


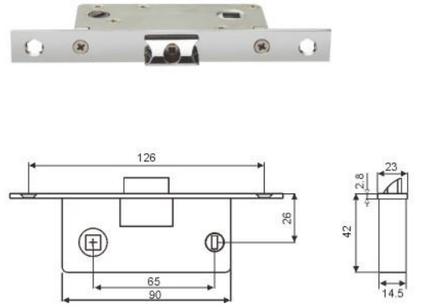


## JS-ST8572
塑钢JS-16×30mm (85)L.M
Plastic steel JS-16×30mm (85)L.M /20

## JS-ST8573
通道锁16X26 / 23X34mm
Passage lock 16X26 / 23X34mm /15

## JS-MS8660
23×25锁体
碰珠门锁
23×25 lock body Bead door lock /25

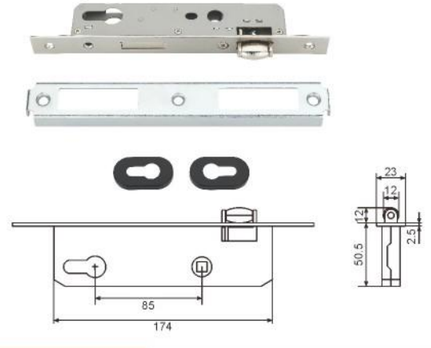


## JS-ST8574
通道锁23X30 / 23X25mm
Passage lock 23X30 / 23X25mm /15

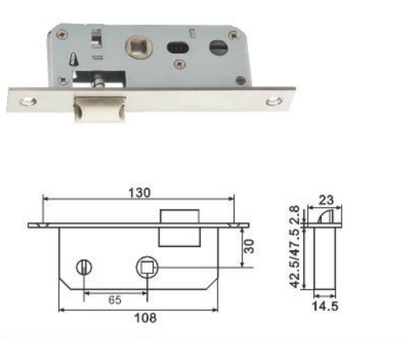

# LOCK BODY SERIES

锁体系列

## JS-ST8575

E多点锁体(85×30系列)

E multi-point lock body (85X30 series) /60



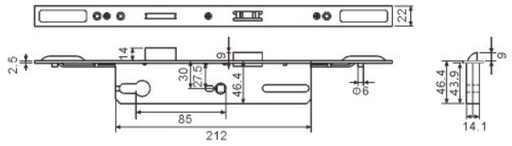


## JS-ST8576

E多点锁体(85×35系列)

E multi-point lock body (85X35 series) /60



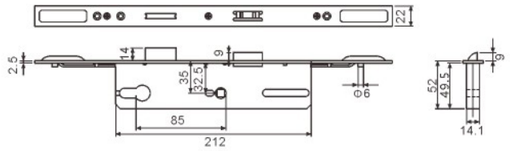


## JS-ST8577

E多点锁体(85×40系列)

E multi-point lock body (85X40 series) /65



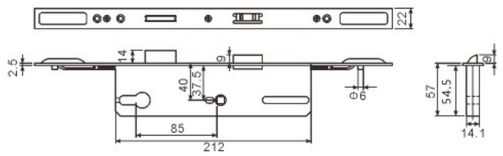


## JS-ST8578

E多点锁体(92×30/92×35/92×40系列)

E multi-point lock body (92x30/92x35/92x40 series) /65



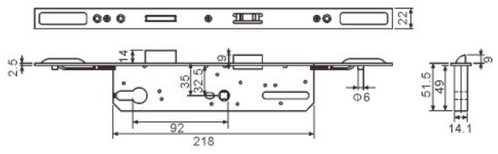






WINDOW CONTROL

五星级配件

# LOCK BOX SERIES

锁盒系列

## JS-SH1001
锁盒15×13
Lock box 15×13mm /10

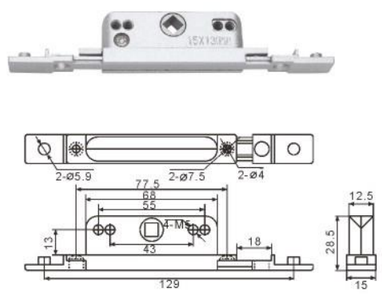


## JS-SH1002
锁盒15×16
Lock box 15×16mm /10

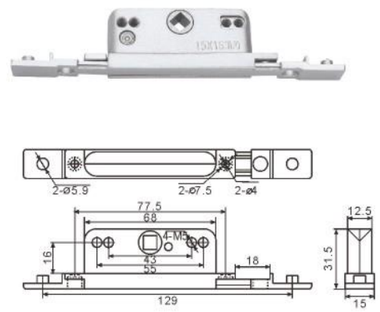


## JS-SH1003
锁盒15×18
Lock box 15×18mm /11

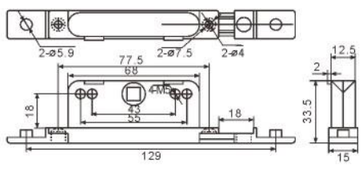


## JS-SH1004
锁盒15×20
Lock box 15×20mm /11

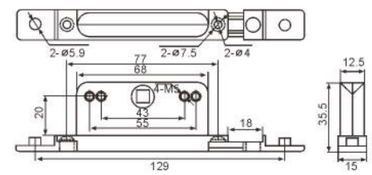


## JS-SH1005
锁盒(双向）15×30
Lock box (two-way)15×30mm /30

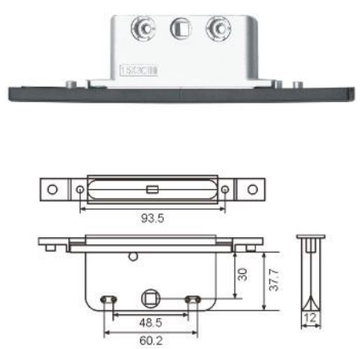


## JS-SH1006
锁盒(双向）15×35
Lock box (two-way)15×35mm /30

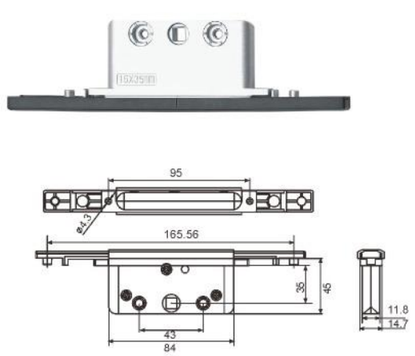






## JS-SH1007
锁盒(双向)15×23
Lock box (two -way)15 × 23mm /13

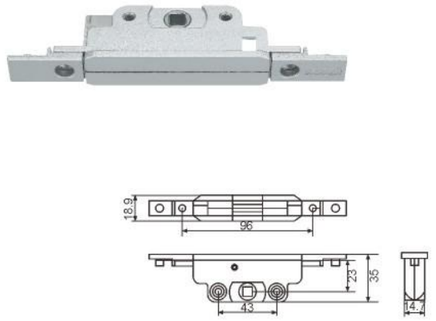


## JS-SH1020
传动180°内倒锁盒 23×6
Driving 180 degrees 23×6 /30

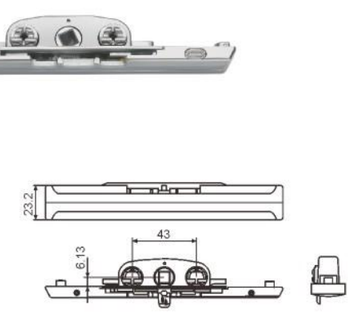


## JS-SH1009
传动180度内开锁盒 22×15
Driving 180 degrees 22×15 /22

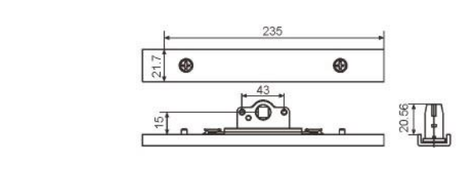


## JS-SH1022
传动180度外开锁盒 23×25
Driving 180 degrees 23×25 /30

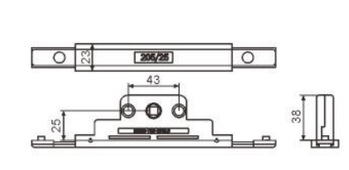


## JS-SH1023
传动180度外开锁盒 23×30
Driving 180 degrees 23×30 /30

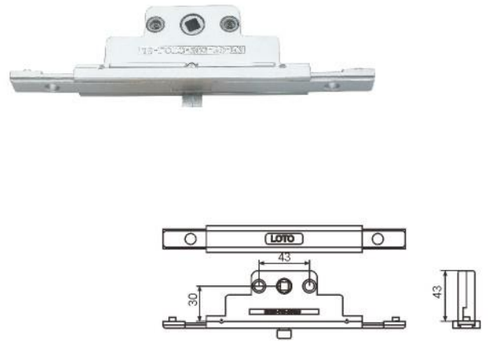


## JS-SH1024
防盗20×32
Anti-theft 20×32

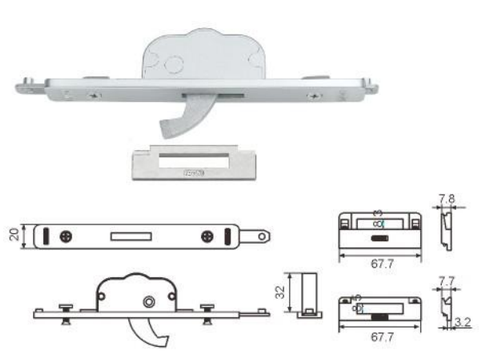

## JS-SH1025
锁盒180° 26×13
Lock box 180° 26×13mm /20



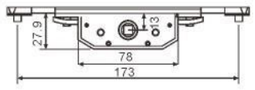


## JS-SH1026
锁盒180° 25×12
Lock box 180° 25×12mm /20



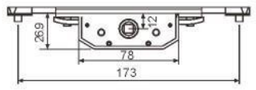


## JS-SH1027
锁盒 180° 27×15
Lock box 180° 27×15mm /25



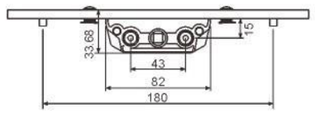


## JS-SH1028
锁盒 180° 21×12
Lock box 180° 21×12mm /20



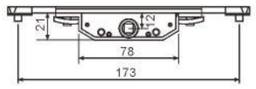


## JS-SH1029
免铣C锁盒
Non milling C-lock box /20



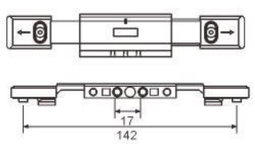


## JS-SH1030
免铣B锁盒
Non milling B-lock box /22



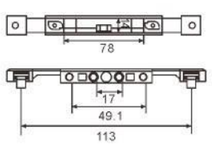






## JS-SH1031
不锈钢锁盒21×10
Stainless steel lock box 21X10 /15
180°



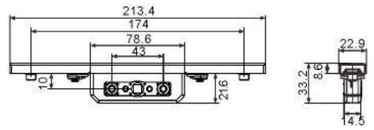


## JS-SH1032
不锈钢锁盒23×11.5
Stainless steel lock box 23X11.5 /15
180°



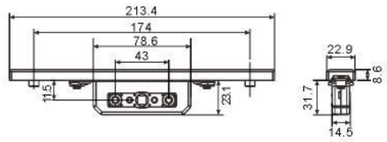


## JS-SH1033
不锈钢锁盒25×13
Stainless steel lock box 25X13 /17
180°



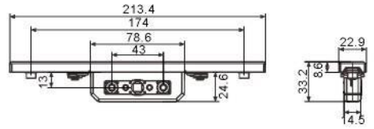


## JS-SH1034
不锈钢锁盒38×25
Stainless steel lock box 38X25 /20



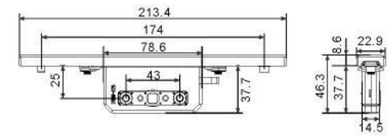


## JS-SH1035
不锈钢锁盒42×30
Stainless steel lock box 42X30 /20
180°



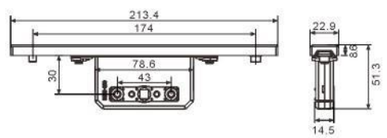


## JS-SH1036
不锈钢锁盒47×35
Stainless steel lock box47X35 /24
180°



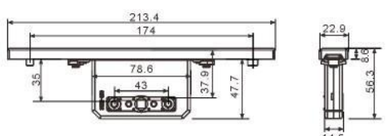

## JS-Y9201
双向月牙锁(铝)（不分左右）
Two-way crescent lock(aluminum) (no left and right) /4.5



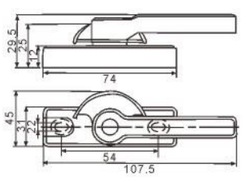


## JS-Y9202
大方柄月牙锁(小半圆)
Big square shank crescent lock(small semi-circle) / 7



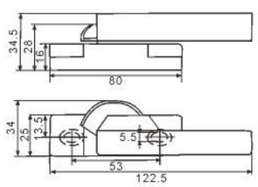


## JS-Y9203
小把锁(锌)
Small lock (Zinc) /5



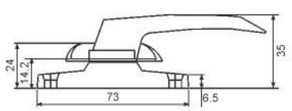


## JS-Y9204
小方柄月牙锁(锌)
Small square shank crescent lock (zinc)/6.6



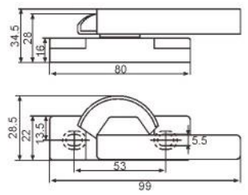


## JS-Y9205
斜柄月牙锁(A)铝
Slanting handle crescent lock (A) aluminum /3.5



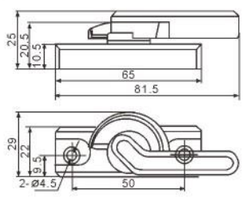


## JS-Y9206
斜柄月牙锁(B)锌
Slanting handle crescent lock (B) zinc /5



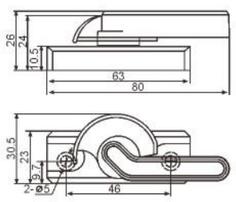






## JS-Y9207
龙山月牙锁(小半圆)
Longshan crescent lock(small semi-circle) /铝3.5 锌4.5



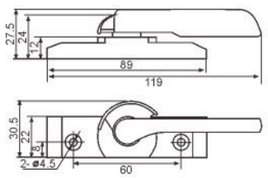


## JS-Y9208
龙山月牙锁(大半圆)
Longshan crescent lock(big semi-circle) /铝4 锌5



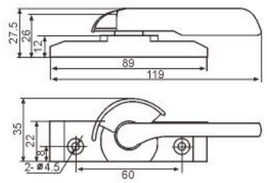


## JS-Y9209
长柄月牙锁(小半圆)
Long-shank crescent lock (small semi circle) /6.6



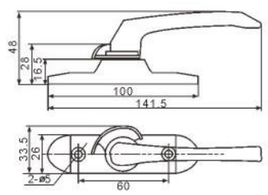


## JS-Y9210
短柄月牙锁(小半圆)
Short-shank crescent lock (small semi circle) /6.5



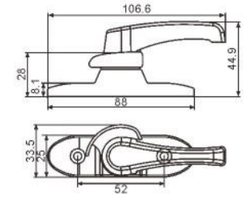


## JS-Y9211
菱形双向月牙锁
Rhombic double-way crescent lock /6.5



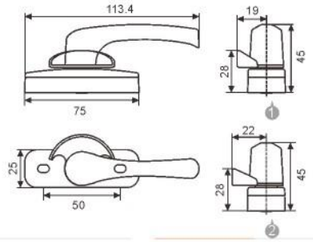


## JS-Y9212
推拉安全锁
Push & pull safety lock /20



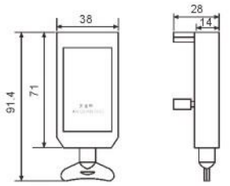

# LATCH LOCK SERIES

各种锁勾

**JS-SG901**
中空勾
Hollow lock
/0.85



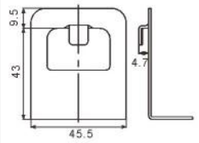


**JS-SG902**
中空勾
Hollow lock
/0.85



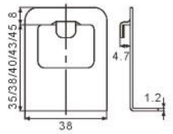


**JS-SG903**
中空勾
Hollow lock
/0.85



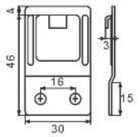


**JS-SG904**
长尾勾
Long tail hook
/0.42



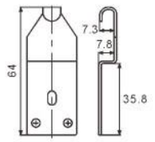


**JS-SG905**
单拔勾
Single pull hook
/0.42



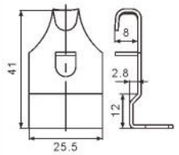


**JS-SG906**
单拔勾
Single pull hook
/0.42



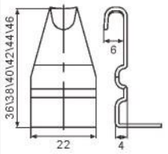


**JS-SG907**
单拔勾
Single pull hook
/0.42



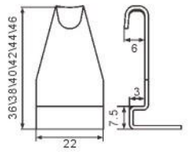


**JS-SG908**
单拔勾
Single pull hook
/0.42



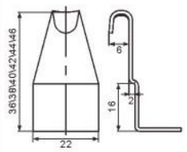


**JS-SG909**
单拔勾
Single pull hook
/0.42



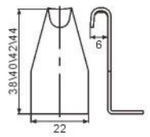


**JS-SG910**
单拔勾
Single pull hook
/0.42



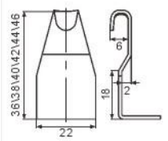


**JS-SG911**
单拔勾
Single pull hook
/0.42



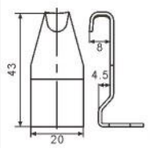


**JS-SG912**
单拔勾
Single pull hook
/0.42



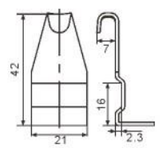


**JS-SG913**
长尾勾
Long tail hook
/0.42



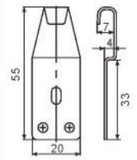


**JS-SG914**
长尾勾
Long tail hook
/0.42



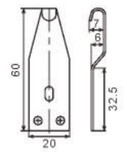


**JS-SG915**
长尾勾
Long tail hook
/0.42



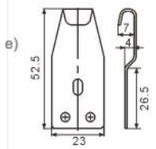


**JS-SG916**
单拔勾
Single pull hook
/0.42



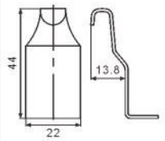


**JS-SG917**
单拔勾
Single pull hook
/0.42



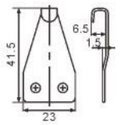


**JS-SG918**
单拔勾
Single pull hook
/0.42



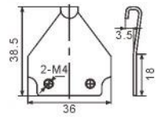


**JS-SG919**
塑钢勾
Plastic steel hook
/0.42



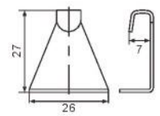


**JS-SG920**
塑钢勾
Plastic steel hook
/0.42



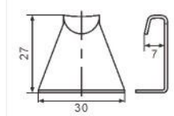




WINDOW CONTROL
五星级配件

# HINGE SERIES

合页系列

## JS-HY5700
调节门合页(带轴承)
Door closing hydraulic hinge(With bearing) /40

- 适用于平框型材标准20槽口平开门
- 合页承重为160公斤/对，具体承重能力与合页安装和型材有关

- Suitable for standard 20 rebate side-hung doors with flat frame section bars
- The maximum loading of hinge is 160 kg/pair and the hinge installation and materials can affect the specific loading ability.



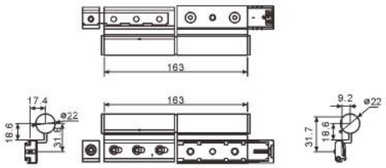


## JS-HY5699
斜边45度门合页
Bevel edge 45° door hinge /45

- 适用于斜边、扇型材标准20槽口平开门
- 合页承重为160公斤/对，具体承重能力与合页安装和型材有关

- Suitable for standard 20 rebate side-hung doors with bevel edge and leaf section bars
- The maximum loading of hinge is 160 kg/pair and the hinge installation and materials can affect the specific loading ability.



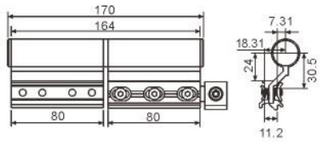


## JS-HY5698
三维可调合页
Three-dimensional adjustable hinge /35

- 适用于平框型材标准20槽口平开门
- 合页承重为120公斤/对，具体承重能力与合页安装和型材有关

- Suitable for standard 20 rebate side-hung doors with flat frame section bars
- The maximum loading of hinge is 120 kg/pair and the hinge installation and materials can affect the specific loading ability.



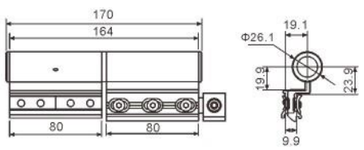


## JS-HY5697
5010粗轴合页
5010 thick shaft hinge /20

- 适用于平框槽口
- 合页承重为80公斤/对，具体承重能力与合页安装和型材有关

- Suitable for flat frame rebate
- The maximum loading of hinge is 80 kg/pair and the hinge installation and materials can affect the specific loading ability.



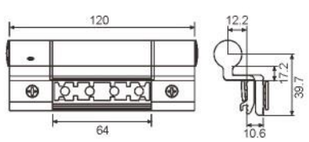


## JS-HY5701
欧标50大合页
European-standard big hinge /15

- 适用于框、扇型材标准20槽口平开门
- 合页承重为120公斤/对，具体承重能力与合页安装和型材有关
- 合页轴套偏芯可调

- Applicable to notch side-hung door with the frame and sash standard of 20
- The maximum loading of hinge is 120 kg/pair and the hinge installation and materials can affect the specific loading ability.
- Hinge sleeve raised core can be adjusted.



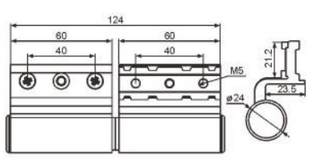


## JS-HY5702
50加长合页
50 lengthened hinge /15

- 适用于框、扇型材标准20槽口平开门
- 合页承重为120公斤/对，具体承重能力与合页安装和型材有关
- 合页轴套偏芯可调

- Applicable to notch side-hung door with the frame and sash standard of 20
- The maximum loading of hinge is 120 kg/pair and the hinge installation and materials can affect the specific loading ability.
- Hinge sleeve raised core can be adjusted.



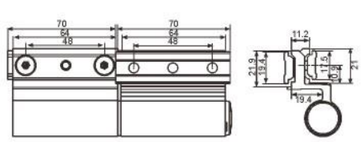


## JS-HY5706
50-6合页
50-6 hinge /5.5

- 适用于无槽口平开窗
- 合页承重为40公斤/对，具体承重能力与合页安装和型材有关

- Applicable to notch-free side-hung window
- The maximum loading of hinge is 40 kg/pair and the hinge installation and materials can affect the specific loading ability.



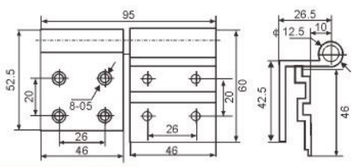


## JS-HY5710
50-10平板合页
50-10 flat hinge /5.5

- 适用于无槽口平开窗
- 合页承重为30公斤/对，具体承重能力与合页安装和型材有关

- Applicable to notch-free side-hung window
- The maximum loading of hinge is 30 kg/pair and the hinge installation and materials can affect the specific loading ability.



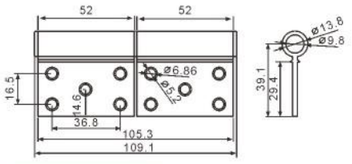


## JS-HY5711
50-13合页
50-13 hinge /6

- 适用于标准20槽口平开门窗
- 合页承重为40公斤/对，具体承重能力与合页安装和型材有关

- Applicable to standard 20 notch side-hung window
- The maximum loading of hinge is 40 kg/pair and the hinge installation and materials can affect the specific loading ability.



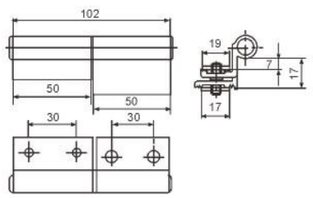


## JS-HY5713
50-14三节合页
50-14 Three –section hinge /15

- 适用于标准20槽口平开门窗
- 合页承重为75公斤/对，具体承重能力与合页安装和型材有关

- Applicable to standard 20 notch side-hung window
- The maximum loading of hinge is 75 kg/pair and the hinge installation and materials can affect the specific loading ability.



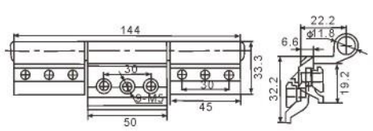


## JS-HY5738
83合页
83 hinge /6.7

- 适用于无槽口平开窗
- 合页承重为50公斤/对，具体承重能力与合页安装和型材有关

- Applicable to notch-free side-hung window
- The maximum loading of hinge is 50 kg/pair and the hinge installation and materials can affect the specific loading ability.



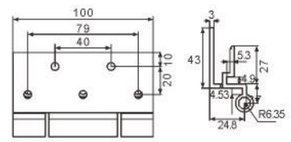


## JS-HY5736
150粗轴合页(平框通用)
150 thick axis hinge (universal for flat frames) /22

- 适用于无槽口平开窗
- 合页承重为120公斤/对，具体承重能力与合页安装和型材有关

- Applicable to notch-free side-hung window
- The maximum loading of hinge is 120 kg/pair and the hinge installation and materials can affect the specific loading ability.



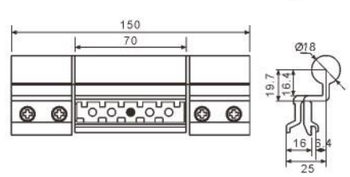

## JS-HY5741
521合页
521 hinge /5.5

- 适用于标准20槽口平开门窗
- 合页承重为40公斤/对，
  具体承重能力与合页安装和型材有关
- Applicable to standard 20 notch side-hung window
- The maximum loading of hinge is 40 kg/pair and the hinge installation and materials can affect the specific loading ability.



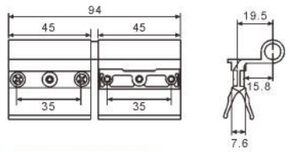


## JS-HY5742
522合页
522 hinge /5.5

- 适用于标准20槽口平开门窗
- 合页承重为40公斤/对，
  具体承重能力与合页安装和型材有关
- Applicable to standard 20 notch side-hung window
- The maximum loading of hinge is 40 kg/pair and the hinge installation and materials can affect the specific loading ability.



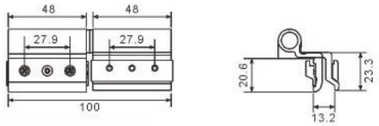


## JS-HY5744
38合页
38 hinge /5.5

- 适用于无槽口平开窗
- 合页承重为40公斤/对，
  具体承重能力与合页安装和型材有关
- Applicable to notch-free side-hung window
- The maximum loading of hinge is 40 kg/pair and the hinge installation and materials can affect the specific loading ability.



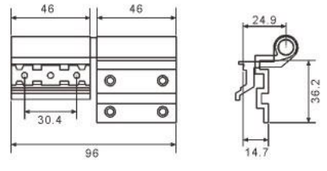


## JS-HY5705
50-5合页
50-5 hinge /5.5

- 适用于无槽口平开窗
- 合页承重为40公斤/对，
  具体承重能力与合页安装和型材有关
- Applicable to notch-free side-hung window
- The maximum loading of hinge is 40 kg/pair and the hinge installation and materials can affect the specific loading ability.



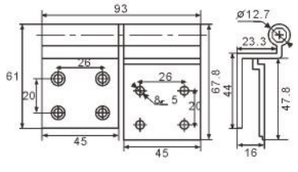


## JS-HY5746
50大三页合页
50 large three-piece hinge /喷塑26

- 适用于框、扇型材标准20槽口平开门
- 合页承重为140公斤/对，具体承重
  能力与合页安装和型材有关
- Applicable to notch side-hung door with the frame and sash standard of 20
- The maximum loading of hinge is 140 kg/pair and the hinge installation and materials can affect the specific loading ability.



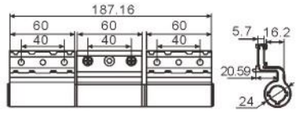


## JS-HY5715
不锈钢防火合页
Stainless steel fireproof hinge /12

- 适用于标准20槽口平开门窗
- 合页承重为60公斤/对，
  具体承重能力与合页安装和型材有关
- Applicable to standard 20 notch side-hung window
- The maximum loading of hinge is 60 kg/pair and the hinge installation and materials can affect the specific loading ability.



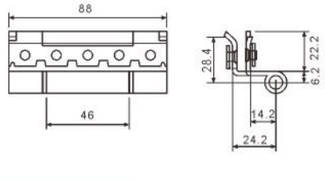






## JS-HY5703
45门合页
50 door hinge /20

- 适用于框、扇型材在同一平面相平的平开门
- 合页承重为110公斤/对，具体
- 承重能力与合页安装和型材有关
  合页轴套偏芯可调
- Applicable to the side-hung door whose frame and sash materials are at the same plane
- The maximum loading of hinge is 110 kg/pair and the hinge installation and materials can affect the specific loading ability.
- Hinge sleeve raised core can be adjusted.



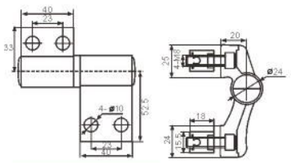





## JS-HY5704
三节45门合页
Three-section 45 door hinge /25

- 适用于框、扇型材在同一平面相平的平开门
- 合页承重为130公斤/对，具体承重能力与
  合页安装和型材有关
  合页轴套偏芯可调
- Applicable to the side-hung door whose frame and sash materials are at the same plane The maximum loading of hinge is 130 kg/pair and the hinge installation and materials can
- affect the specific loading ability.
- Hinge sleeve raised core can be adjusted.



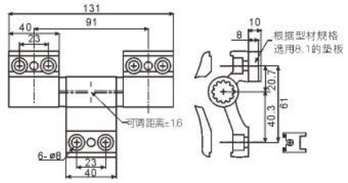





## JS-HY5707
50-15断桥合页
50-5 bridge-cut- off hinge /6

- 适用于标准20槽口平开门窗
- 合页承重为40公斤/对，
  具体承重能力与合页安装和型材有关
- 合页轴套偏芯可调
- Applicable to standard 20 notch side-hung window
- The maximum loading of hinge is 40 kg/pair and the hinge installation and materials can affect the specific loading ability.
- Hinge sleeve raised core can be adjusted.



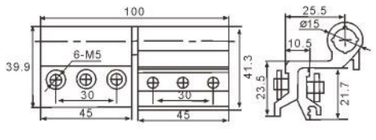


## JS-HY5708
50-9门合页
50-9 door hinge /6.4

- 适用于无槽口平开窗
- 合页承重为50公斤/对，
  具体承重能力与合页安装和型材有关
- Applicable to notch-free side-hung window
- The maximum loading of hinge is 50 kg/pair and the hinge installation and materials can affect the specific loading ability.



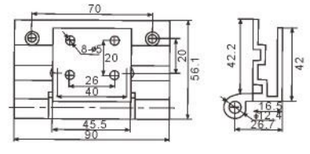


## JS-HY5709
50-9A合页
50-9A hinge /6.7

- 适用于无槽口平开窗
- 合页承重为60公斤/对，
  具体承重能力与合页安装和型材有关
- Applicable to notch-free side-hung window
- The maximum loading of hinge is 60 kg/pair and the hinge installation and materials can affect the specific loading ability.



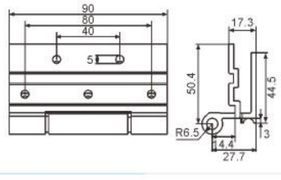


## JS-HY5712
58B合页
58B hinge /6

- 适用于标准20槽口平开门窗
- 合页承重为60公斤/对，
  具体承重能力与合页安装和型材有关
- Applicable to standard 20 notch side-hung window
- The maximum loading of hinge is 60 kg/pair and the hinge installation and materials can affect the specific loading ability.



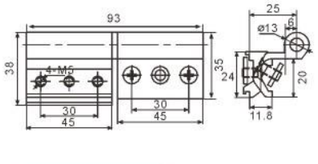

## JS-HY5714
57E合页（双搭接）
57E hinge /6



- 搭接量12cm
- 适用于标准20槽口平开门窗
- 合页承重为60公斤/对，
  具体承重能力与合页安装和型材有关
- Lapping amount 12cm
- Applicable to standard 20 notch side-hung window
- The maximum loading of hinge is 60 kg/pair and the hinge installation and materials can affect the specific loading ability.

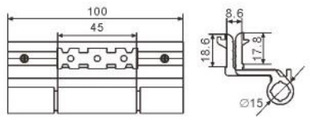


## JS-HY5716
80A 合页
80A hinge /6.7



- 适用于无槽口平开窗
- 合页承重为40公斤/对，
  具体承重能力与合页安装和型材有关
- Applicable to notch-free side-hung window
- The maximum loading of hinge is 40 kg/pair and the hinge installation and materials can affect the specific loading ability.

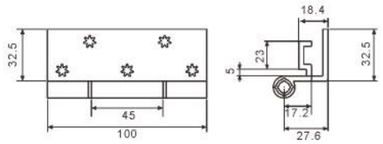


## JS-HY5717
57-1合页
57-1 hinge /6.7



- 适用于标准20槽口平开门窗
- 合页承重为60公斤/对，
  具体承重能力与合页安装和型材有关
- Applicable to standard 20 notch side-hung window
- The maximum loading of hinge is 60 kg/pair and the hinge installation and materials can affect the specific loading ability.

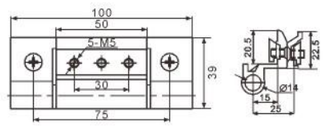


## JS-HY5718
57-1加长合页
57-1 lengthened hinge /10.5

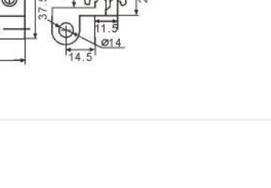

- 适用于标准20槽口平开门窗
- 合页承重为75公斤/对，
  具体承重能力与合页安装和型材有关
- Applicable to standard 20 notch side-hung window
- The maximum loading of hinge is 75 kg/pair and the hinge installation and materials can affect the specific loading ability.

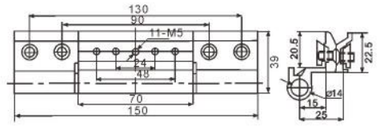


## JS-HY5719
57-2合页
57-2 hinge /6.7



- 适用于标准20槽口平开门窗
- 合页承重为60公斤/对，
  具体承重能力与合页安装和型材有关
- Applicable to standard 20 notch side-hung window
- The maximum loading of hinge is 60 kg/pair and the hinge installation and materials can affect the specific loading ability.

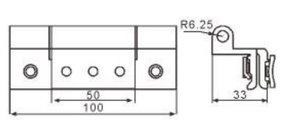


## JS-HY5720
57-5合页
57-5 hinge /10.5



- 适用于标准20槽口平开门窗
- 合页承重为75公斤/对，
  具体承重能力与合页安装和型材有关
- Applicable to standard 20 notch side-hung window
- The maximum loading of hinge is 75 kg/pair and the hinge installation and materials can affect the specific loading ability.

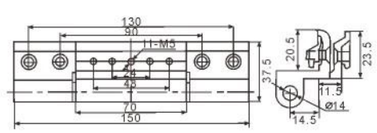






## JS-HY5721
57-3合页
57-3 hinge /6.7



- 适用于标准20槽口平开门窗
- 合页承重为60公斤/对，
  具体承重能力与合页安装和型材有关
- Applicable to standard 20 notch side-hung window
- The maximum loading of hinge is 60 kg/pair and the hinge installation and materials can affect the specific loading ability.

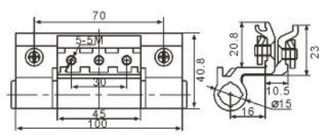


## JS-HY5722
57-3加长合页（不锈钢压板）
57-3 lengthened hinge (stairless steel plate pinch) /10.5



- 适用于标准20槽口平开门窗
- 合页承重为80公斤/对，
  具体承重能力与合页安装和型材有关
- Applicable to standard 20 notch side-hung window
- The maximum loading of hinge is 80 kg/pair and the hinge installation and materials can affect the specific loading ability.

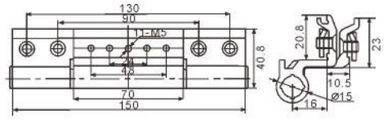


## JS-HY5723
57-4合页SJ
57-4 hinge SJ /6



- 适用于标准20槽口平开门窗
- 合页承重为40公斤/对，
  具体承重能力与合页安装和型材有关
- Applicable to standard 20 notch side-hung window
- The maximum loading of hinge is 40 kg/pair and the hinge installation and materials can affect the specific loading ability.

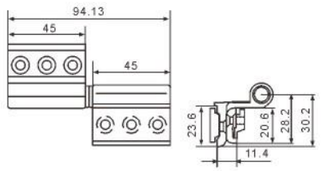


## JS-HY5724
57-6合页JL
57-6 hinge JL /6.7



- 适用于标准20槽口平开门窗
- 合页承重为60公斤/对，
  具体承重能力与合页安装和型材有关
- Applicable to standard 20 notch side-hung window
- The maximum loading of hinge is 60 kg/pair and the hinge installation and materials can affect the specific loading ability.

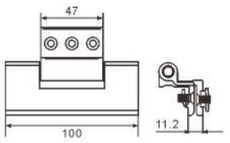


## JS-HY5725
57-7 合页
57-7 hinge /6.7



- 适用于标准20槽口平开门窗
- 合页承重为60公斤/对，
  具体承重能力与合页安装和型材有关
- Applicable to standard 20 notch side-hung window
- The maximum loading of hinge is 60 kg/pair and the hinge installation and materials can affect the specific loading ability.

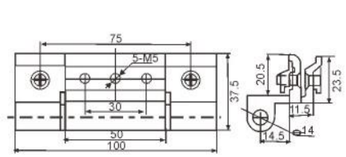


## JS-HY5726
57-8合页NT
57-8 hinge NT /6.7



- 适用于标准20槽口平开门窗
- 合页承重为60公斤/对，
  具体承重能力与合页安装和型材有关
- Applicable to standard 20 notch side-hung window
- The maximum loading of hinge is 60 kg/pair and the hinge installation and materials can affect the specific loading ability.

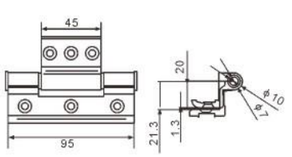

## JS-HY5727
57-1A合页(不锈钢压板)
57-1A hinge (Stainless steel plate pinch) /6.7

- 适用于标准20槽口平开门窗
- 合页承重为65公斤/对，
  具体承重能力与合页安装和型材有关
- Applicable to standard 20 notch side-hung window
- The maximum loading of hinge is 65 kg/pair and the hinge installation and materials can affect the specific loading ability.



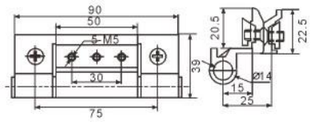


## JS-HY5728
55断桥合页（奋安）
55 bridge-cut- off hinge(fen'an) /6.7

- 适用于标准20槽口平开门窗
- 合页承重为50公斤/对，
  具体承重能力与合页安装和型材有关
- Applicable to standard 20 notch side-hung window
- The maximum loading of hinge is 50 kg/pair and the hinge installation and materials can affect the specific loading ability.



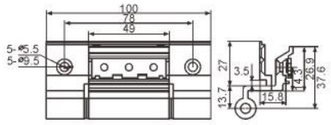


## JS-HY5729
55-3合页
55-3 hinge /6.7

- 适用于无槽口平开窗
- 合页承重为50公斤/对，
  具体承重能力与合页安装和型材有关
- Applicable to notch-free side-hung window
- The maximum loading of hinge is 50 kg/pair and the hinge installation and materials can affect the specific loading ability.



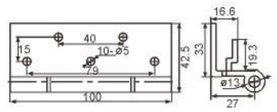


## JS-HY5730
铝合金门合页
Aluminium-alloy door hinge /25

- 内六角扳手插入塑料件内孔金
  属件内方可调节（扳手可调节
  360° 否则扳手会自转！
- Adjust by inserting the inner hexagon spanner (the maximum is 360°) into the metalwork in the inner hole of plastic part, otherwise, the spanner will turn itself.



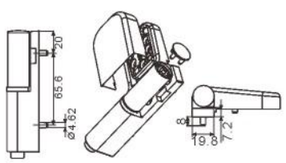


## JS-HY5731
新70-1合页
New 70-1 hinge /6.7

- 适用于无槽口平开窗
- 合页承重为50公斤/对，
  具体承重能力与合页安装和型材有关
- Applicable to notch-free side-hung window
- The maximum loading of hinge is 50 kg/pair and the hinge installation and materials can affect the specific loading ability.



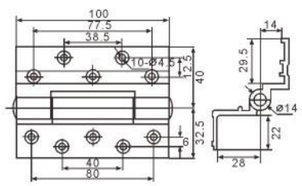


## JS-HY5732
E门合页
E door hinge /6.7

- 适用于无槽口平开窗
- 合页承重为60公斤/对，
  具体承重能力与合页安装和型材有关
- Applicable to notch-free side-hung window
- The maximum loading of hinge is 60 kg/pair and the hinge installation and materials can affect the specific loading ability.



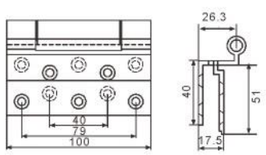






## JS-HY5733
80合页
80 hinge /6.7

- 适用于无槽口平开窗
- 合页承重为50公斤/对，
  具体承重能力与合页安装和型材有关
- Applicable to notch-free side-hung window
- The maximum loading of hinge is 50 kg/pair and the hinge installation and materials can affect the specific loading ability.



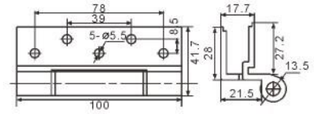


## JS-HY5739
超强合页（平框可用）
Ultra-strong hinge (Flat frame available) /7

- 适用于标准20槽口平开门窗
- 合页承重为60公斤/对，
  具体承重能力与合页安装和型材有关
- Applicable to standard 20 notch side-hung window
- The maximum loading of hinge is 60 kg/pair and the hinge installation and materials can affect the specific loading ability.



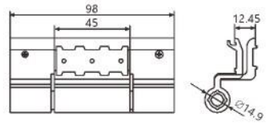


## JS-HY5743
523合页
523 hinge /5.5

- 适用于标准20槽口平开门窗
- 合页承重为40公斤/对，
  具体承重能力与合页安装和型材有关
- Applicable to standard 20 notch side-hung window
- The maximum loading of hinge is 40 kg/pair and the hinge installation and materials can affect the specific loading ability.



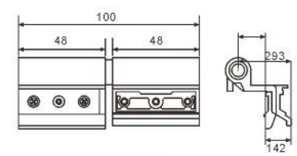


## JS-HY5735
纱窗合页(1)
Window screen hinge (1) /4

- 适用于无槽口平开窗
- 合页承重为30公斤/对，
  具体承重能力与合页安装和型材有关
- Applicable to notch-free side-hung window
- The maximum loading of hinge is 30 kg/pair and the hinge installation and materials can affect the specific loading ability.



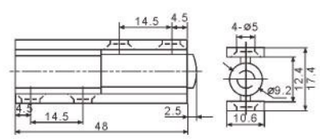


## JS-HY5740
57-9 铝木合页
57-9 aluminum-wood hinge /7.5

- 适用于标准20槽口平开门窗
- 合页承重为60公斤/对，
  具体承重能力与合页安装和型材有关
- Applicable to standard 20 notch side-hung window
- The maximum loading of hinge is 60 kg/pair and the hinge installation and materials can affect the specific loading ability.



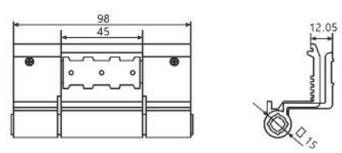


## JS-HY5747
55/65/70双外开合页
55/65/70 double outward opening hinge 喷塑13/氧化17

- 适用于框、扇型材标准20槽口平开门
- 合页承重为70公斤/对
  具体承重能力与合页安装和型材有关
- 合页轴套偏芯可调
- Applicable to notch side-hung door with the frame and sash standard of 20
- The maximum loading of hinge is 70 kg/pair and the hinge installation and materials can affect the specific loading ability.
- Hinge sleeve raised core can be adjusted.



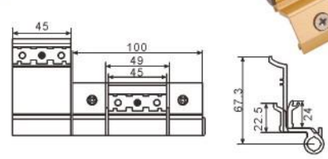

## JS-CX3050
美式插销
America-style bolt /12.5

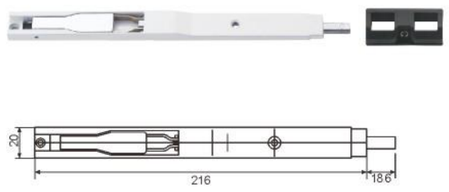


## JS-CX3051
断桥插销
Bridge-cut-off bolt /7

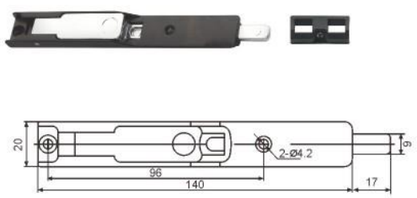


## JS-CX3052
断桥插销(加长)
Bridge-cut-off bolt
(Lengthened) /20

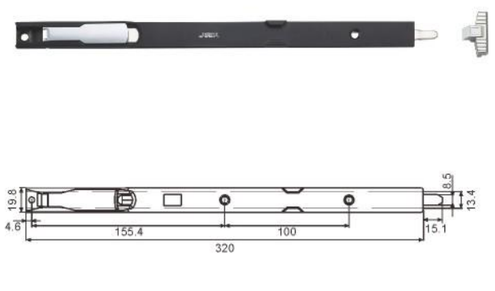


## JS-CX3055
对开内倒插销
Split inside latch /20

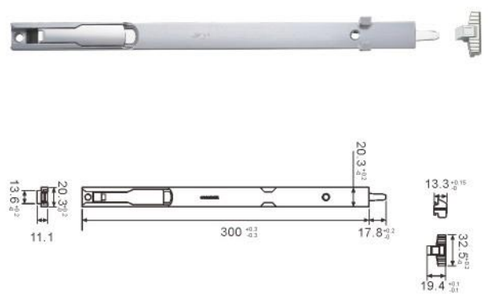


## JS-CX3053
平面插销(加长)
Plate latch (Lengthened) /8.5

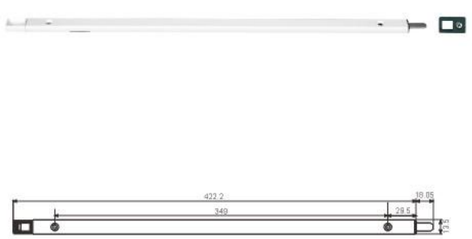


## JS-CX3054
平面插销
Plate latch /6

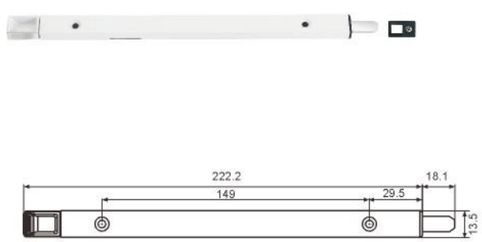






## JS-CX3056
对开内倒联动插销
Split horizontal pivoting window linkage latch /50




## JS-CX3057
联动插销
Linkage latch /50

对开门型材通用，可做门可做窗
（注意中挺双槽口）

Universal split door section bars,
can be used for doors and windows
(pay attention to the middle rail double rebate)

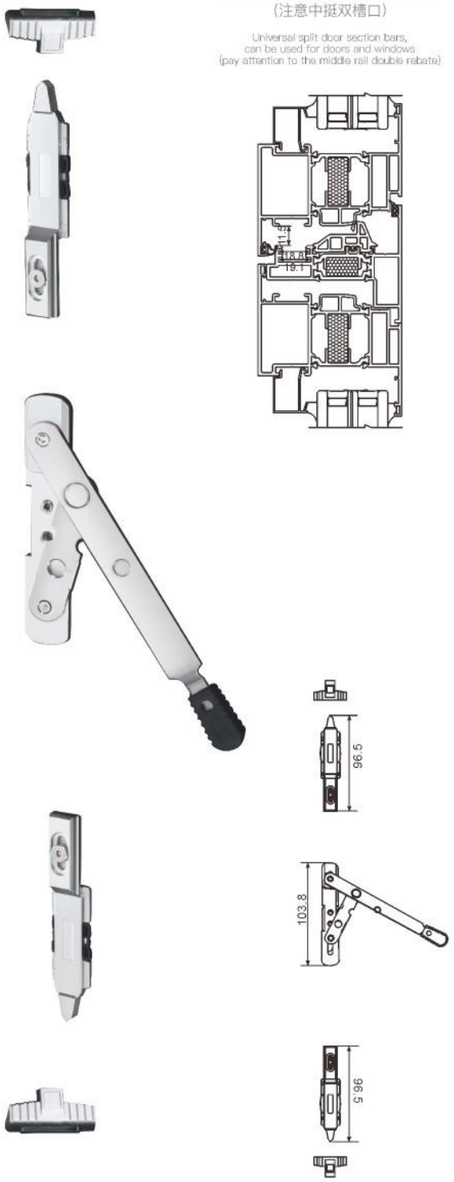

## JS-FC3033
二连杆(定点式)
2-links bar (fixed-point type) /10

材质:304
规格:6/8/10/12/14寸
底槽宽:13.5/18mm
Material:304
Specification:6/8/10/12/14inch
Bottom widths:13. 5/18mm



## JS-FC3035
二连杆(风撑)
2-links bar(wind bracing) /202:3.8 304:8

材质:202/304
规格:6/8/10/12/14寸
底槽宽:13.5/18mm
Material:202/304
Specification:6/8/10/12/14inch
Bottom widths:13. 5/18mm



## JS-FC3036
欧式风撑
European-style wind bracing /202:6.5 304:8.5

材质:202/304
规格:6/8/10/12/14寸
适用:欧标槽（不锈钢）
Material:202/304
Specification:6/8/10/12/14inch
Suitable for :Europe slot
(stainless steel)



## JS-FC3037
塑钢二连杆(风撑)
Plastic steel two-link rod (wind bracing) /202:4 304:8

材质:202/304
规格:6/8/10/12寸
底槽宽:18mm
Material:202/304
Specification:6/8/10/12/inch
Bottom widths:18mm



## JS-FC3038
伸缩杆
Expansion link /10寸:16

材质:304
规格:6/8/10/12/14寸
底槽宽:22mm
Material:304
Specification:6/8/10/12/14inch
Bottom widths:22mm



## JS-FC3039
伸缩风撑
Telescopic wind bracing /15

材质:304
规格:6/8/10/12/14寸
适用:欧标槽（不锈钢）
Material:304
Specification:6/8/10/12/14inch
Suitable for :Europe slot
(stainless steel)



(分左右) (left and right)

## JS-FC3040
液压风撑
Hydraulic wind bracing /25

材质:铝合金
规格:12/14/16寸
底槽宽:13.5mm
Material: aluminum alloy
Specification:12/14/16inch
Bottom widths:13. 5mm



## JS-FC3041
防火风撑
Fireproof wind bracing /20

材质:304
规格:10/12/14寸
底槽宽:13.5mm
Material:304
Specification:10/12/14inch
Bottom widths:13.5mm







## JS-YX001
227A隐藏铰链(多功能)
227A invisible hinge (multifunctional) /45

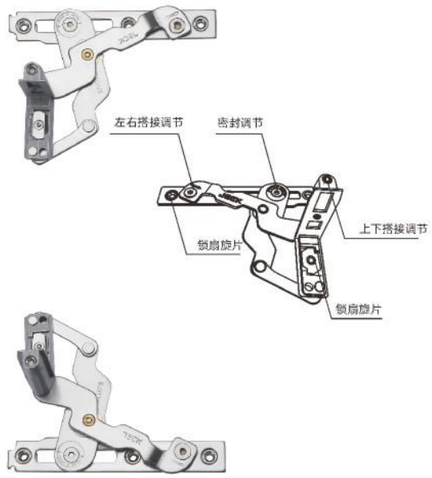


## JS-YX002
228幻影铰链
228 vision hinge /49

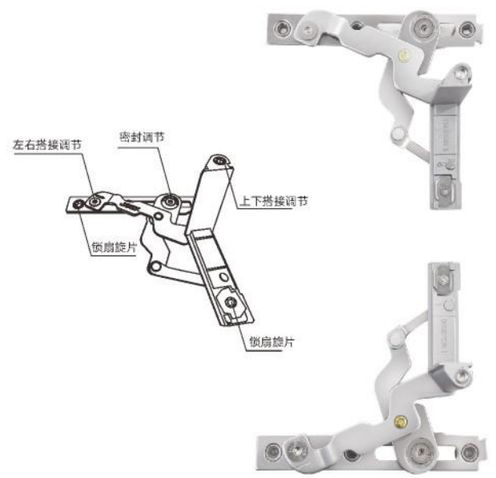


## JS-YX003
229助力隐藏铰链
229 boosting invisible hinge /55




## JS-YX004
K槽23隐形铰链
K rebate 23 invisible hinge /50

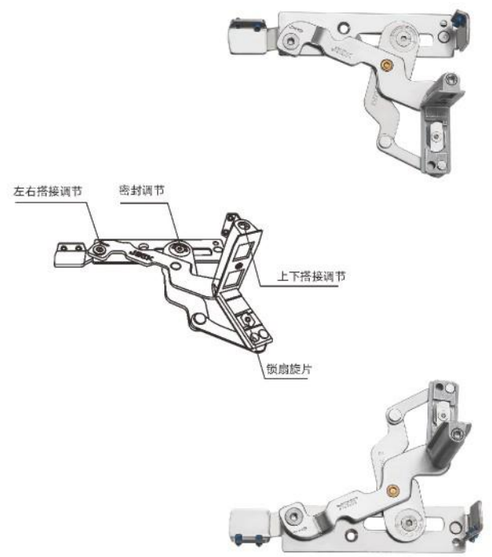

## JS-YX005
470隐藏铰链
470 invisible hinge /50

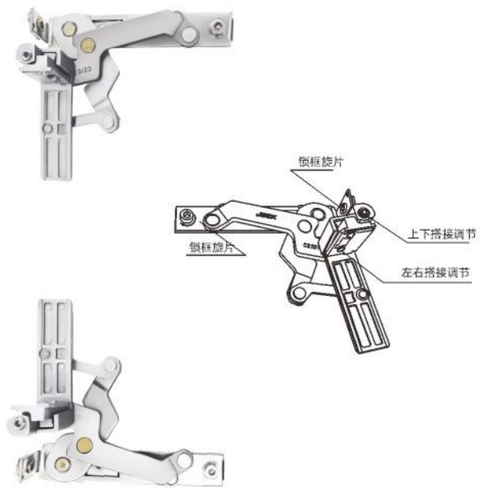


## JS-YX006
防火铰链
Fireproof hinge /50

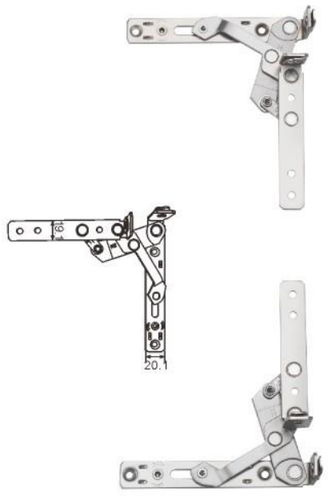


## JS-YX007
丝吉利亚90°隐藏铰链
Siegenia 90° invisible hinge /50

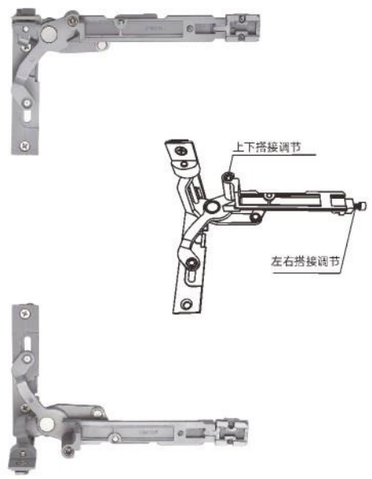


## JS-YX008
诺托90°隐藏铰链
Roto 90° invisible hinge /50








## JS-YX009
快装隐形铰链
Quick installed invisible hinge /30

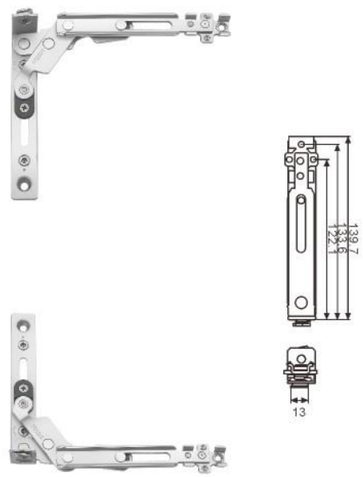


## JS-YX010
纱窗秒拆合页
Quick-release hinge for screen windows /10

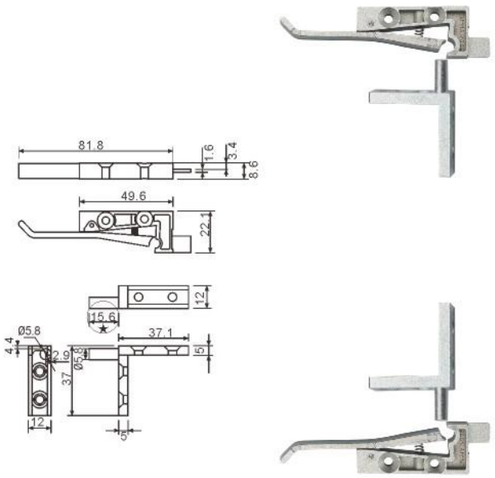


## JS-YX012
纱窗铰链(180°)
window screen hinge /20

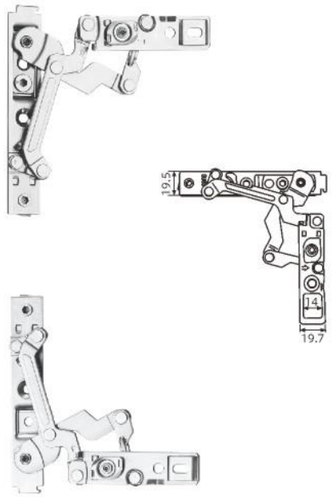


## JS-YX013
U槽铰链
U rebate hinge /55

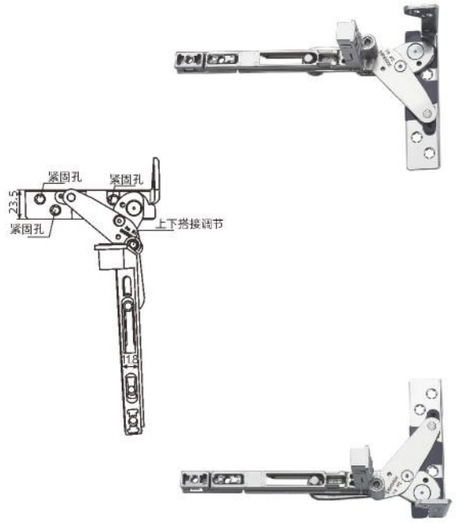

## 180隐形铰链 180 concealed hinge 轻型55/重型70

专利产品 PATENT PRODUCT

**JS-YX180**

此铰链适用于欧标20槽,
不分左右 (开启180°)

This hinge is applied to Europe 20 slot,
not around (opening 180°)
Hinge divided into left and right /55



一、
- 产品特点\P1.锌合金、不锈钢材质，耐腐蚀性能高，经久耐用。
- 隐藏式结构，安装后，内饰面美观
- 夹持式安装方式，安装简单、方便，连接牢固可靠。
- 三维可调，调整便捷。
- 摩擦式运动方式，使用时安全性高\P6.有效提高门窗整体气密、水密性。

- Character: zinc alloy, stainless steel material, high corrosion resistance, durable service
- Hidden structure, nice internal decoration after installation
- Clip hold type installation manner, simple and convenient installation, solid and reliable connection
- D-adjustable, convenient adjustment
- Friction type motion mode, high safety at using. \P6. Effectively improve air and water tightness for door and window




二、使用范围\P180°隐形铰链
- 适用于欧标20槽口内、外平开型材
- 安装过程中不分左右
- 轻型承重为：40KG
- 加重型承重为：70GK（要配防下滑不锈钢杆子）

- Application range\P180°hidden hinge
- Applied to Europe 20-grooved internal & external profile
- No around during the course of installation
- Light bearing: 40 Kg
- Heavy bearing: 70GK (match anti-sliding stainless steel rod)

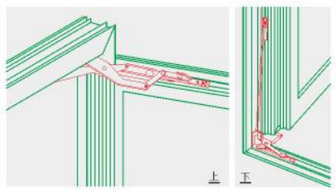


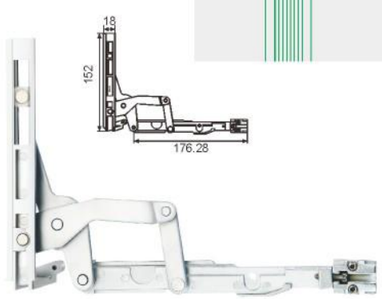


## 90隐形铰链 90 concealed hinge /45

**JS-YX90**

此铰链适用于欧标20槽,
有左右之分 (开启90°)

This hinge is applied to Europe 20 slot,
not around (opening 90°)
Hinge divided into left and right /55

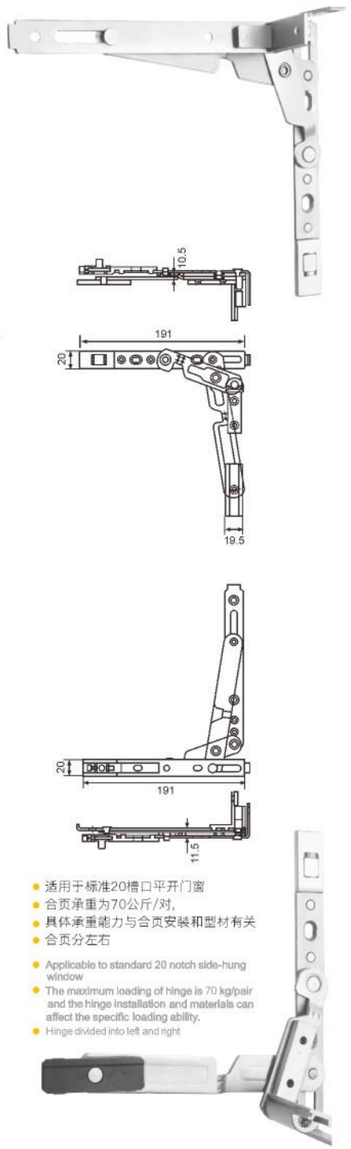


- 适用于标准20槽口平开门窗
- 合页承重为70公斤/对,
- 具体承重能力与合页安装和型材有关
- 合页分左右

- Applicable to standard 20 notch side-hung window
- The maximum loading of hinge is 70 kg/pair and the hinge installation and materials can affect the specific loading ability.
- Hinge divided into left and right







## 塑钢隐藏铰链（9系） Plastic steel hidden hinge (9 series) /50

**HY-PYC（9）**

适用于标准欧式U型槽铝塑平开门窗
合页承重：70kg/对
具体承重能力与合页安装和型材有关
合页分左右

Applied to standard Europe U-grooved plastic steel flat door and window
Max bearing of hinge: 70kg/pair
The specific bearing ability is related to hinge installation and profile
Hinge divided into left and right

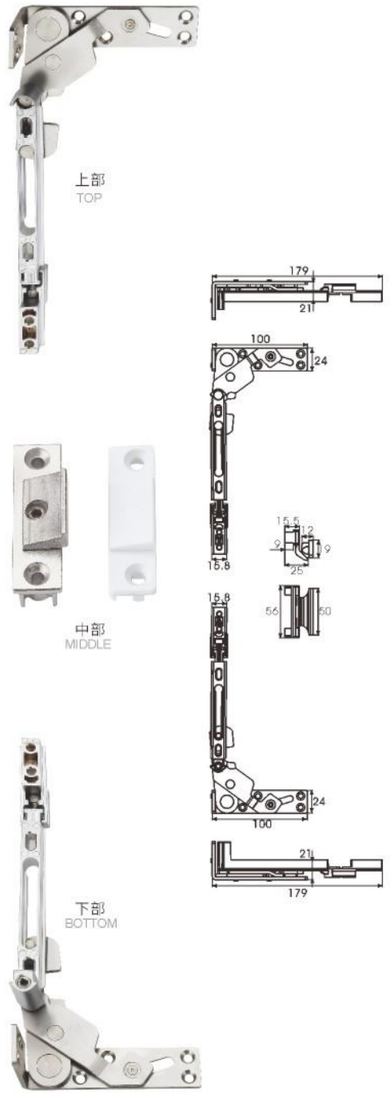


## 塑钢隐藏铰链（13系） Plastic steel hidden hinge (13 series) /50

**HY-PYC（13）**

适用于标准欧式U型槽铝塑平开门窗
合页承重：70kg/对
具体承重能力与合页安装和型材有关
合页分左右

Applied to standard Europe U-grooved plastic steel flat door and window
Max bearing of hinge: 70kg/pair
The specific bearing ability is related to hinge installation and profile
Hinge divided into left and right



## JS-HC3033 平开四连杆(13.5槽)

Flat open four link (13.5 rebate ) /15



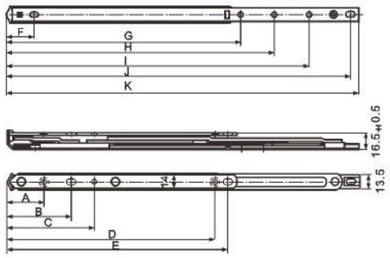


适用范围：平开窗 Suitable: Gasement Window
表面处理：本色 Finish:Natural
主要材质：不锈钢 Material :Stainless stee

安装尺寸 / Main: telescopic boom and sliding support （单位Unit:mm）

| 规格 | A | B | C | D | E | F | G | H | I | J | K |
|---|---|---|---|---|---|---|---|---|---|---|---|
| 10 | 37 | 60 | ⌒ | 173 | 186 | 28 | 196 | ⌒ | ⌒ | 248 | 256 |
| 12 | 37 | 65 | ⌒ | 191 | 204 | 28 | 212 | ⌒ | 256 | 298 | 306 |
| 14 | 37 | 65 | 88 | 210 | 223 | 28 | 237 | 270 | 306 | 348 | 356 |
| 16 | 37 | 65 | 107 | 229 | 242 | 28 | 262 | 306 | 356 | 398 | 406 |

技术性能 / Technical function

| 窗最高（mm） Window max height | 窗最宽（mm） Window max width | 窗最重（kg） Window max weight | 开启角度 Opening angle | 价格 Price |
|---|---|---|---|---|
| 1000 | 400 | 14 | 90° | 15 |
| 1100 | 500 | 17 | 90° | 17 |
| 1200 | 600 | 20 | 90° | 19.5 |
| 1500 | 600 | 23 | 90° | 22.5 |

## JS-HC3031 平开四连杆(22槽)

Flat open four link（22 rebate ） /1.8



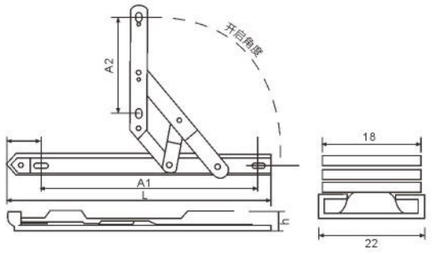


安装尺寸 / Main: telescopic boom and sliding support （单位Unit:mm）

| 规格 | A | B | C | D | E | F | G | H | I | J | K | L | M | N |
|---|---|---|---|---|---|---|---|---|---|---|---|---|---|---|
| 10" | 39 | 57 | ⌒ | ⌒ | 183 | 196 | 32 | ⌒ | ⌒ | 203 | ⌒ | ⌒ | 250 | 258 |
| 12" | 39 | 63 | ⌒ | ⌒ | 202 | 215 | 32 | 156 | 220 | 246 | ⌒ | ⌒ | 300 | 308 |
| 14" | 39 | 63 | 90 | ⌒ | 219 | 232 | 32 | 162 | 237 | 263 | ⌒ | 303 | 350 | 358 |
| 16" | 39 | 63 | 10 | ⌒ | 238 | 251 | 32 | 171 | 262 | 288 | ⌒ | 353 | 400 | 408 |
| 18" | 39 | 63 | 128 | ⌒ | 257 | 270 | 32 | 179 | 287 | 313 | ⌒ | 403 | 450 | 458 |

技术性能 / Technical function

| 窗最高（mm） Window max height | 窗最宽（mm） Window max width | 窗最重（kg） Window max weight | 开启角度 Opening angle | 价格 Price |
|---|---|---|---|---|
| 1300 | 400 | 18 | 90° | 18 |
| 1400 | 500 | 22 | 45/90° | 20 |
| 1500 | 600 | 26 | 45/90° | 22.5 |
| 1600 | 700 | 30 | 45/90° | 25 |
| 1700 | 800 | 35 | 45/90° | 28 |





## JS-HC3034 上悬四连杆（13.5槽）

Upper suspension four-linkage bar（13.5 rebate ）/15



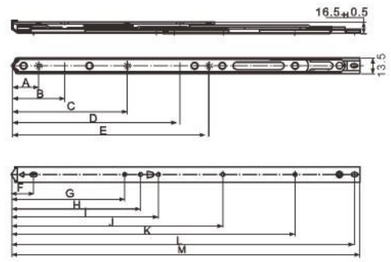


适用范围：上悬窗 Suitable: TOP Hung Window
表面处理：本色 Finish:Natural
主要材质：不锈钢 Material :Stainless stee

安装尺寸 / Main: telescopic boom and sliding support

| 规格 Specification | A | B | C | D | E | F | G | H | I | J | K | L | M |
|---|---|---|---|---|---|---|---|---|---|---|---|---|---|
| 10" | 39 | 77 | ⌒ | ⌒ | 141 | 32 | ⌒ | ⌒ | 178 | ⌒ | 203 | 250 | 258 |
| 12" | 39 | 77 | ⌒ | 127 | 169 | 32 | 174 | 194 | 220 | ⌒ | 253 | 300 | 308 |
| 14" | 39 | 77 | ⌒ | 155 | 197 | 32 | 183 | 205 | 231 | ⌒ | 303 | 350 | 358 |
| 16" | 39 | 77 | ⌒ | 185 | 227 | 32 | 172 | 194 | 220 | ⌒ | 353 | 400 | 408 |
| 18" | 39 | 77 | ⌒ | 215 | 257 | 32 | 180 | 205 | 231 | 278 | 403 | 450 | 458 |
| 20" | 39 | 77 | 168 | 245 | 287 | 32 | 165 | 188 | 214 | 308 | 413 | 500 | 508 |
| 24" | 39 | 77 | 212 | 305 | 347 | 32 | 174 | 202 | 228 | 368 | 493 | 600 | 608 |

技术性能 / Technical function

| 窗最高（mm） Window max height | 窗最宽（mm） Window max width | 窗最重（kg） Window max weight | 开启角度 Opening angle | 价格 Price |
|---|---|---|---|---|
| 650 | 1000 | 20 | 35° | 15 |
| 800 | 1100 | 33 | 30/35° | 17 |
| 1000 | 1200 | 38 | 30/35° | 19.5 |
| 1200 | 1300 | 47 | 25/30° | 22.5 |
| 1400 | 1400 | 58 | 25/30° | 27 |
| 1600 | 1500 | 70 | 20/25° | 31 |
| 1800 | 1500 | 85 | 20/25° | 35 |

## JS-HC3032上悬四连杆(22槽)

Upper suspension four-linkage bar（22 rebate ） /18



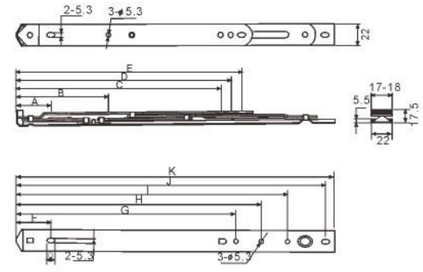


安装尺寸 / Main: telescopic boom and sliding support

| 规格 Specification | A | B | C | D | E | F | G | H | I | J | K | L | M |
|---|---|---|---|---|---|---|---|---|---|---|---|---|---|
| 10" | 39 | 77 | ⌒ | ⌒ | 141 | 32 | ⌒ | ⌒ | 178 | ⌒ | 203 | 250 | 258 |
| 12" | 39 | 77 | ⌒ | 127 | 169 | 32 | 174 | 194 | 220 | ⌒ | 253 | 300 | 308 |
| 14" | 39 | 77 | ⌒ | 155 | 197 | 32 | 183 | 205 | 231 | ⌒ | 303 | 350 | 358 |
| 16" | 39 | 77 | ⌒ | 185 | 227 | 32 | 172 | 194 | 220 | ⌒ | 353 | 400 | 408 |
| 18" | 39 | 77 | ⌒ | 215 | 257 | 32 | 180 | 205 | 231 | 278 | 403 | 450 | 458 |
| 20" | 39 | 77 | 168 | 245 | 287 | 32 | 165 | 188 | 214 | 308 | 413 | 500 | 508 |
| 24" | 39 | 77 | 212 | 305 | 347 | 32 | 174 | 202 | 228 | 368 | 493 | 600 | 608 |

技术性能 / Technical function

| 窗最高（mm） Window max height | 窗最宽（mm） Window max width | 窗最重（kg） Window max weight | 开启角度 Opening angle | 价格 Price |
|---|---|---|---|---|
| 650 | 1000 | 20 | 35° | 18 |
| 800 | 1100 | 30 | 30/35° | 20 |
| 1000 | 1200 | 40 | 30/35° | 22.5 |
| 1200 | 1300 | 60 | 25/30° | 25 |
| 1400 | 1400 | 80 | 25/30° | 28 |
| 1600 | 1500 | 90 | 20/25° | 31 |
| 1800 | 1500 | 100 | 20/25° | 35 |

## JS-HC3035 平开免铣槽四连杆

Casement milling-free rebate four connection rods /20



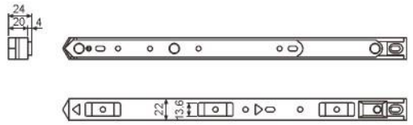


安装尺寸 / Main: telescopic boom and sliding support

| 规格 Specification | A | B | C | D | E | F | G | H | I | J | K | L | M |
|---|---|---|---|---|---|---|---|---|---|---|---|---|---|
| 10" | 39 | 77 | ⌒ | ⌒ | 141 | 32 | ⌒ | ⌒ | 178 | ⌒ | 203 | 250 | 258 |
| 12" | 39 | 77 | ⌒ | 127 | 169 | 32 | 174 | 194 | 220 | ⌒ | 253 | 300 | 308 |
| 14" | 39 | 77 | ⌒ | 155 | 197 | 32 | 183 | 205 | 231 | ⌒ | 303 | 350 | 358 |
| 16" | 39 | 77 | ⌒ | 185 | 227 | 32 | 172 | 194 | 220 | ⌒ | 353 | 400 | 408 |
| 18" | 39 | 77 | ⌒ | 215 | 257 | 32 | 180 | 205 | 231 | 278 | 403 | 450 | 458 |
| 20" | 39 | 77 | 168 | 245 | 287 | 32 | 165 | 188 | 214 | 308 | 413 | 500 | 508 |
| 24" | 39 | 77 | 212 | 305 | 347 | 32 | 174 | 202 | 228 | 368 | 493 | 600 | 608 |

技术性能 / Technical function

| 窗最高 (mm) Window max height | 窗最宽 (mm) Window max width | 窗最重 (kg) Window max weight | 开启角度 Opening angle | 价格 Price |
|---|---|---|---|---|
| 650 | 1000 | 25 | 35° | 15 |
| 800 | 1100 | 33 | 30/35° | 17 |
| 1000 | 1200 | 38 | 30/35° | 19.5 |
| 1200 | 1300 | 47 | 25/30° | 22.5 |
| 1400 | 1400 | 58 | 25/30° | 27 |
| 1600 | 1500 | 70 | 20/25° | 31 |
| 1800 | 1500 | 85 | 20/25° | 35 |

## JS-HC3036 上悬免铣槽四连杆

Top-hung milling-free rebate four connection rods /20



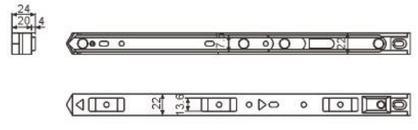


安装尺寸 / Main: telescopic boom and sliding support

| 规格 Specification | A | B | C | D | E | F | G | H | I | J | K | L | M |
|---|---|---|---|---|---|---|---|---|---|---|---|---|---|
| 10" | 39 | 77 | ⌒ | ⌒ | 141 | 32 | ⌒ | ⌒ | 178 | ⌒ | 203 | 250 | 258 |
| 12" | 39 | 77 | ⌒ | 127 | 169 | 32 | 174 | 194 | 220 | ⌒ | 253 | 300 | 308 |
| 14" | 39 | 77 | ⌒ | 155 | 197 | 32 | 183 | 205 | 231 | ⌒ | 303 | 350 | 358 |
| 16" | 39 | 77 | ⌒ | 185 | 227 | 32 | 172 | 194 | 220 | ⌒ | 353 | 400 | 408 |
| 18" | 39 | 77 | ⌒ | 215 | 257 | 32 | 180 | 205 | 231 | 278 | 403 | 450 | 458 |
| 20" | 39 | 77 | 168 | 245 | 287 | 32 | 165 | 188 | 214 | 308 | 413 | 500 | 508 |
| 24" | 39 | 77 | 212 | 305 | 347 | 32 | 174 | 202 | 228 | 368 | 493 | 600 | 608 |

| 窗最高 (mm) Window max height | 窗最宽 (mm) Window max width | 窗最重 (kg) Window max weight | 开启角度 Opening angle | 价格 Price |
|---|---|---|---|---|
| 650 | 1000 | 20 | 35° | 18 |
| 800 | 1100 | 30 | 30/35° | 20 |
| 1000 | 1200 | 40 | 30/35° | 22.5 |
| 1200 | 1300 | 60 | 25/30° | 25 |
| 1400 | 1400 | 80 | 25/30° | 28 |
| 1600 | 1500 | 90 | 20/25° | 31 |
| 1800 | 1500 | 100 | 20/25° | 35 |





## JS-HC3037重型防尘铰链

Heavy-duty dustproof hinge /25



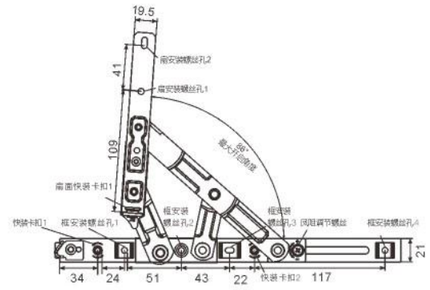


## JS-HC3038 6.0防尘铰链

6.0 dustproof hinge /25



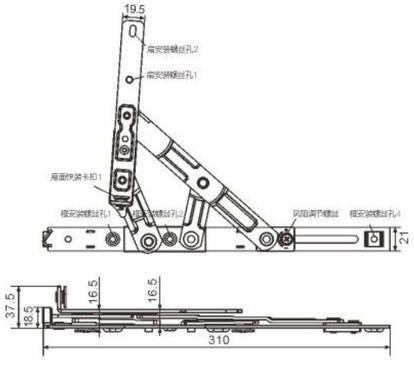

## JS-FZ901
欧标槽坠落器
Europe grooved
anti-falling device /11

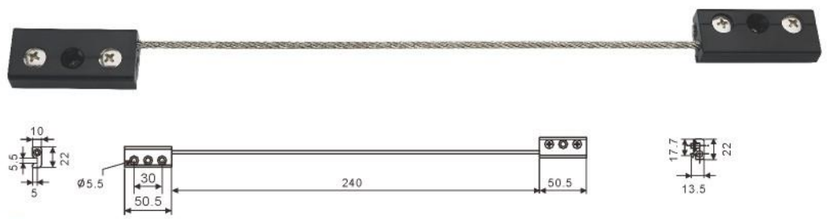


## JS-FZ902
平槽防坠落器
Flat grooved
anti-falling device /10

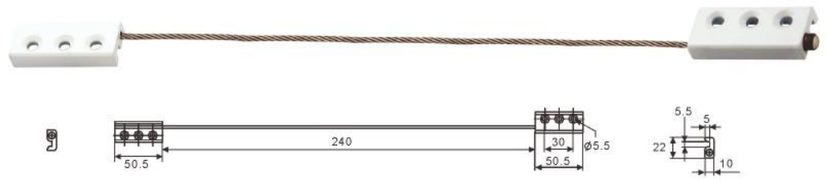


## JS-FZ903
23槽口防坠落器
23 rebate fall preventer
/11

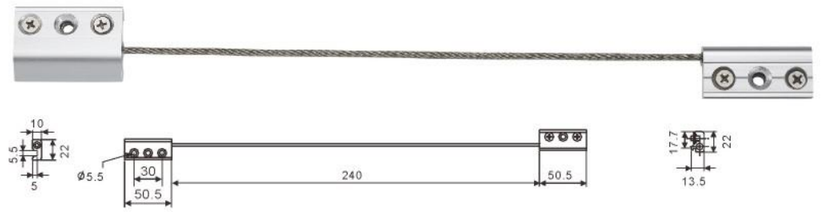


## JS-FZ904
20槽口防坠落器（不分左右）
23 rebate fall preventer
(without difference between
left and right) /11

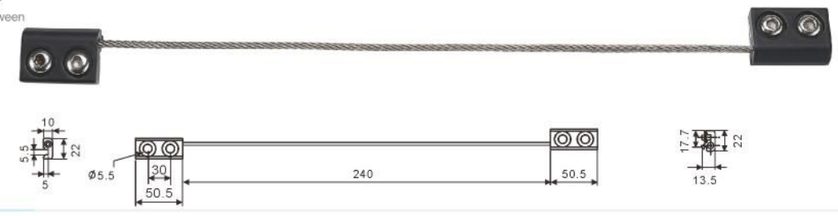


## JS-FZ905
不锈钢防坠落器
Stainless steel fall preventer /6

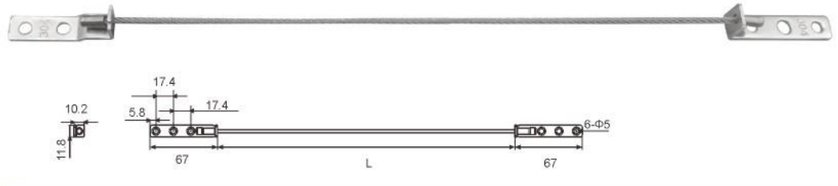






## JS-LT414
欧标塑料杆
European standard plastic rod




## JS-LT415
欧标扇槽口防尖条
European standard leaf rebate tip preventing strip




## JS-LT416
欧标框槽口防尖条
European standard frame rebate tip preventing strip




## JS-FZ2906
微通风安全锁
Slight ventilation safety lock /30




## JS-FZ2907
微通风限位锁
Slight ventilation limit lock /25




注：带儿童锁功能，防止小孩随意开启窗户发生意外。

Note: It is provided with the children lock function to prevent accidents caused by children carelessly opening windows.

## JS-T766
断桥推拉锁
Bridge-cut-off sliding lock /10

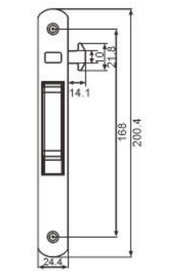




锁钩前后可调±5
弯锁钩可翻转±3 /10
Latch hook can be adjusted ±5
Bent locking hook can rolling over ±3

## JS-T765
单面推拉(带锁)
Single-direction push-pull lock (with lock) / 喷塑15

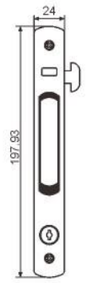




## JS-T768
双面推拉锁(带锁)
Double-direction push-pull lock
(with lock) /22

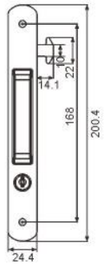




锁钩前后可调±5.
弯锁钩可翻转±3.
Latch hook can be adjusted ±5
Bent locking hook can rolling over ±3

## JS-T769
双面推拉锁(不带锁)
Double-direction push-pull lock
(no with lock) /17

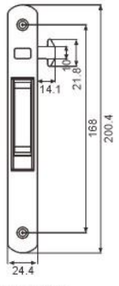




锁钩前后可调±5
弯锁钩可翻转±3
Latch hook can be adjusted ±5
Bent locking hook can rolling over ±3

## JS-T777
单面推拉锁B(带锁)
Single-face push and pull lock B
(with lock) /16

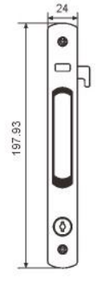




## JS-T778
铝型材推拉锁
Aluminum profile push and pull lock
喷塑8.5/氧化10

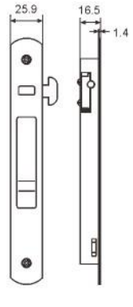








## JS-T779
大门拉手
Large door handle /15

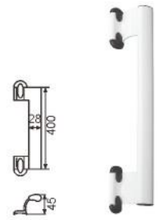


## JS-T780
大门拉手
Large door handle /20

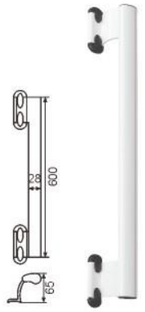


## JS-T781
大门拉手
Large door handle/25

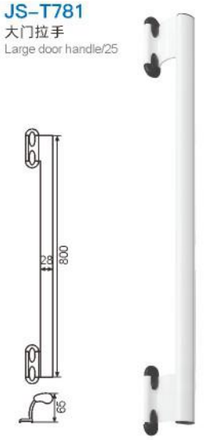


## JS-T770
大门拉手
Large door handle /8.5

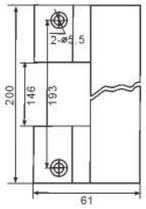




## JS-T772
组合推拉勾锁
Combined push & pull hook lock /18

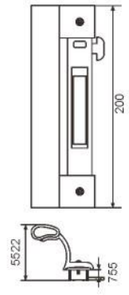




## JS-T762
推拉拉手
Push & pull handle /6.5

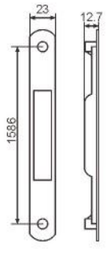




## JS-T771
纱窗拉手
Window screen handle /5

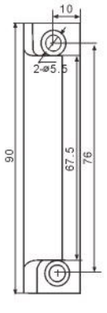




## JS-T764
塑料推拉锁
Plastic push-pull lock /3.5




锁钩前后可调±5
Latch hook can be adjusted ±5

## JS-T763
加纳推拉锁
Ghana push-pull lock /8.5

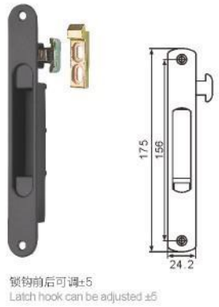


锁钩前后可调±5
Latch hook can be adjusted ±5

## JS-T761
推拉锁(拨叉式)
Push-pull lock (Pusher type) /12

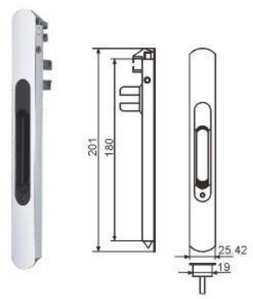


## JS-T782
铝压铸推拉锁
Aluminum die casting push-pull lock /12

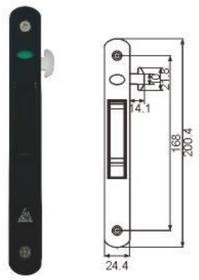


## JS-T774
中锁
Mid lock /13

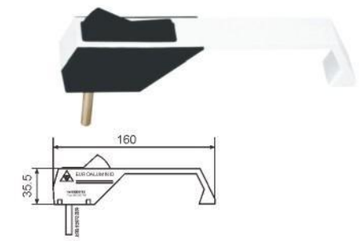


## JS-T775
推拉按钮把手
Push-pull knob handle /3.5




## JS-T775
边锁
Side lock /6



## JS-T776
碰锁
Latch lock / 5



## JS-JM942
塑料拉手
Plastic handle / 5



## JS-JM970
塑料方三角
Plastic square triangle /2.5



## JS-JM971
塑料圆三角
Plastic round triangle /2.5







## 1
平扣
Flat buckle /0.5

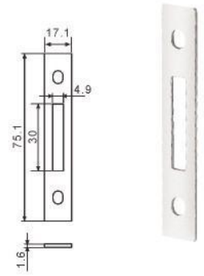


## 2
中扣
Mid buckle /0.5

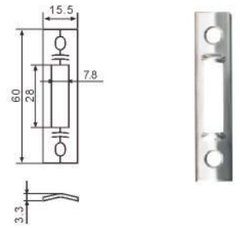


## 3
大扣
Large buckle /0.9

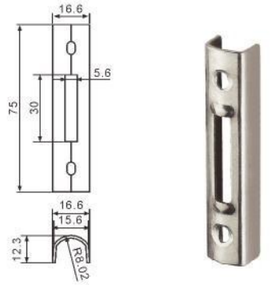


## 4
长扣
Long buckle /0.5

## 5
小扣
Small buckle /0.9

## 6
推扣
Push buckle /0.9

## 7
碰扣
Touch buckle /2

## 8
短勾
Short hook /0.9

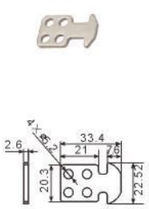


## 9
长弯勾
Long hook /0.9

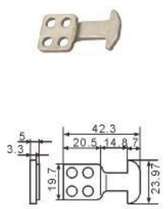


## 10
长平勾
Long hook /0.9

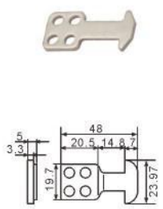


## 11
推扣
Push buckle /1

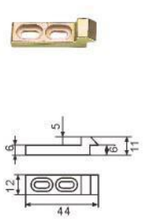


## 12
圆孔扣
Round hole buckle /1

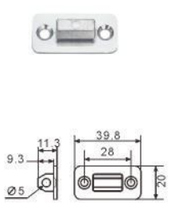


注 绿色标记为可供选择。
Note Green marking is available for choice

## JS-FL6601
/7




## JS-FL6602
/4.5




## JS-FL6603
/5.5

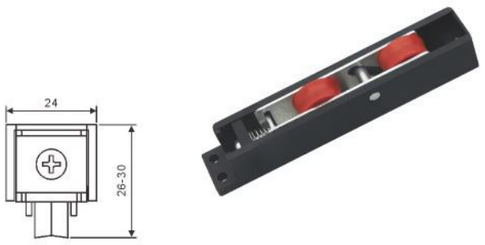


## JS-FL6604
/7




## JS-FL6605
/8




## JS-FL6606
/3




## JS-FL6607
/7




## JS-FL6608
/6








## JS-JM933
型材角码(小)
Profile corner brace (small) /5

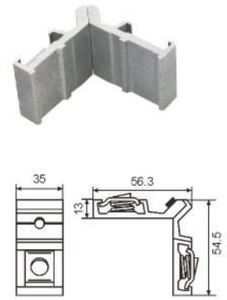


## JS-JM934
型材角码(大)
Profile corner brace (big) /6

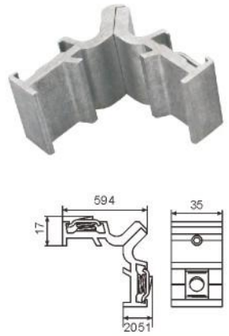


## JS-JM935
玻璃垫块(小)
Glass cushion block (small)

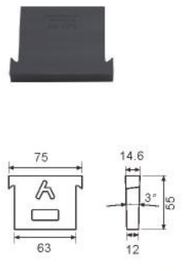


## JS-JM936
玻璃垫块(大)
Glass cushion block (big)

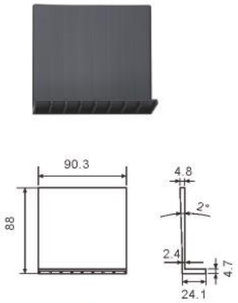


## JS-JM937
铝角码(小)
Aluminum corner brace (small) /2




## JS-JM938
铝角码(中)
Aluminum corner brace (middle) /2.2




## JS-JM939
铝角码(大)
Aluminum corner brace (big) /3




## JS-JM940
加纳小角码
Ghana small corner brace /2

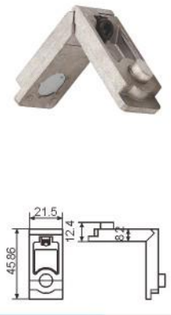


## JS-JM941
加纳大角码
Ghana big corner brace /2.4

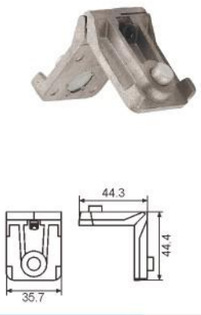


## JS-JM942
塑料角码
Plastic corner brace /1.6

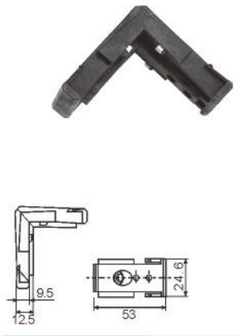

DRIVER
SERIES
传动器系列

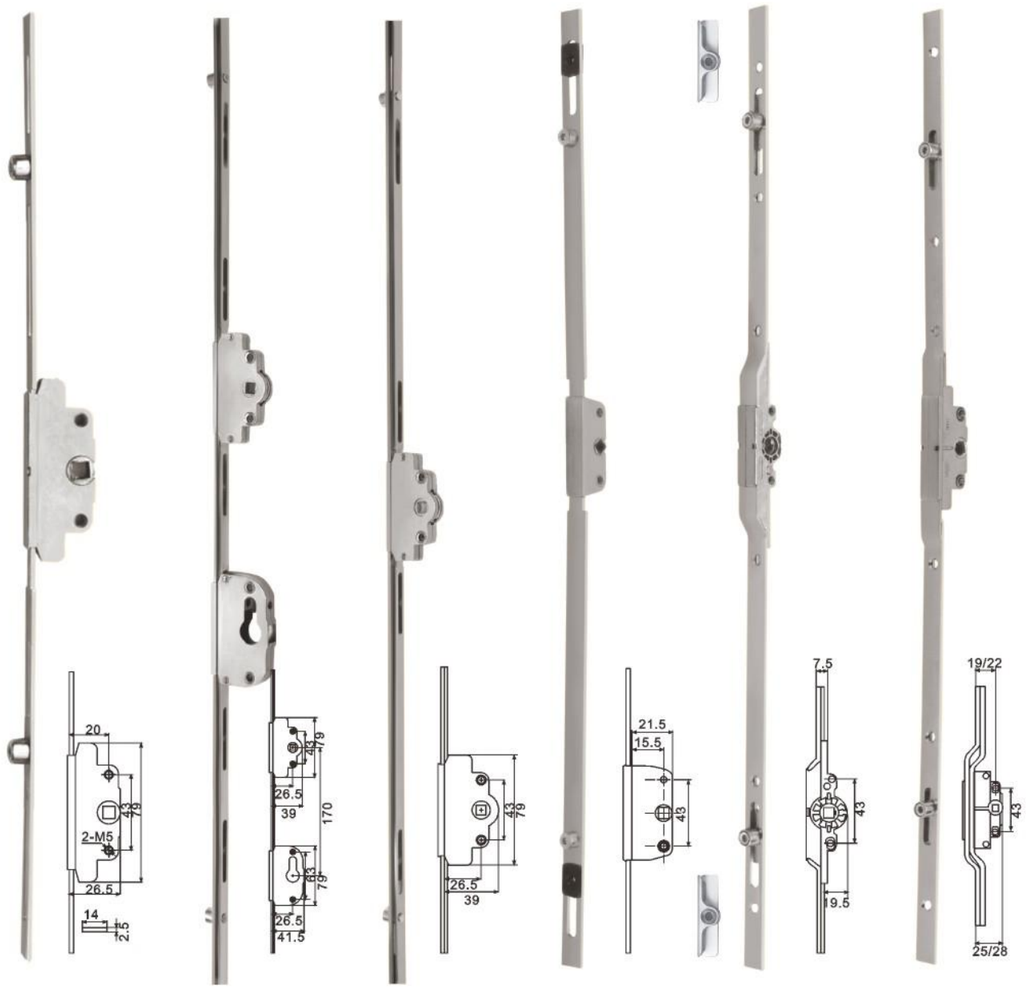


## JS-C421
1419单片传动器

规格：600-1200mm
用途：平开、推拉型材

**Name:** 1419 **Single driver**
**Specification:** 600-1200 mm
**Usage:** side-hung and sliding material

/10

## JS-C422
168大门传动器总成

规格：1200-1680mm
用途：平开型材

**Name:** 168 door driver assembly
**Specification:** 1200-1680 mm
**Usage:** side-hung material

/30

## JS-C423
168大门传动器

规格：1200-1680mm
用途：平开型材

**Name:** 168 door driver
**Specification:** 1200-1680 mm
**Usage:** side-hung material

/25

## JS-C424
单片传动器

规格：600-1200mm
用途：平开、推拉型材

**Name:** Single driver
**Specification:** 600-1200 mm
**Usage:** side-hung and sliding material

/10

## JS-C425
内开传动器

规格：600-1200mm
用途：平开、推拉型材

**Name:** Internal open driver
**Specification:** 600-1200 mm
**Usage:** side-hung and sliding material

/11

## JS-C426
外开传动器

规格：400-1400mm
用途：平开型材

**Name:** Swing - out driver
**Specification:** 400-1400mm
**Usage:** side-hung material

/11.5

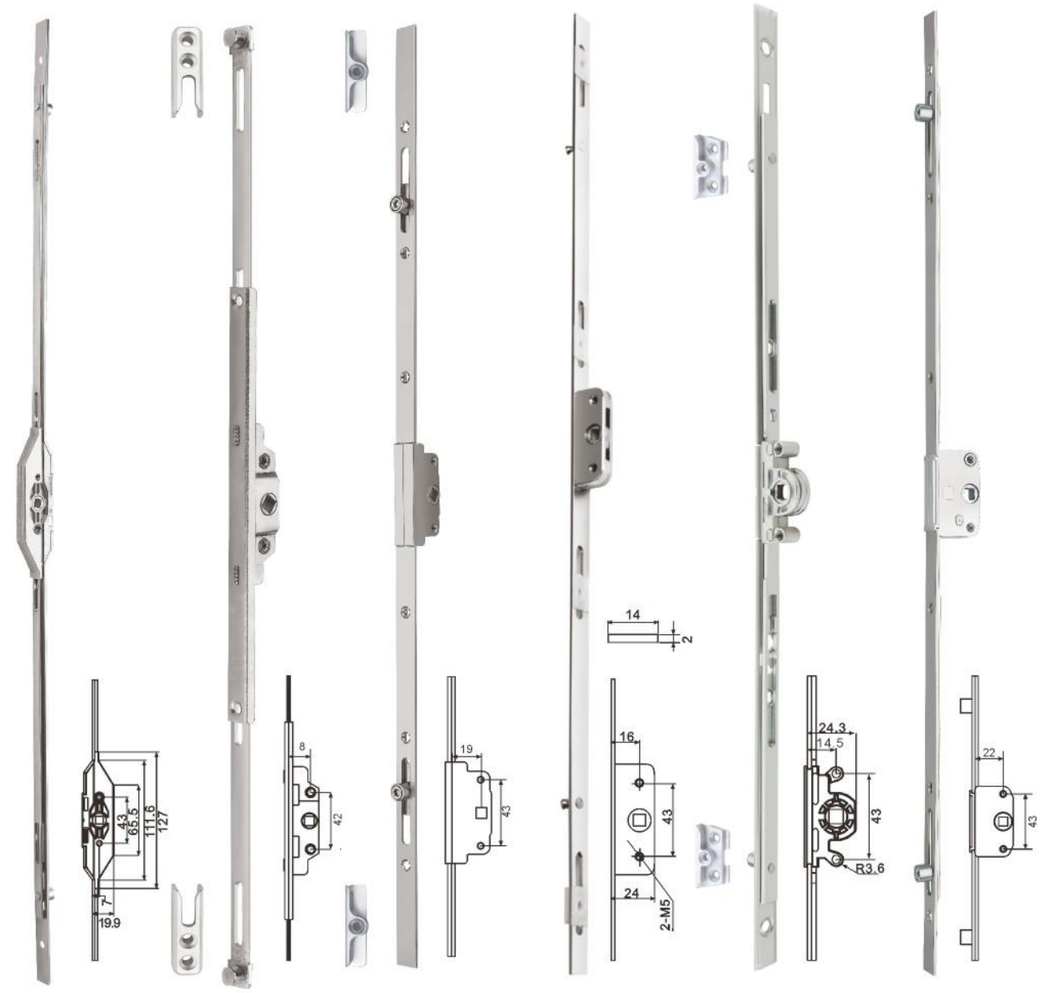


## JS-C428
内开双向传动器

规格：400-1200mm
用途：平开、推拉型材

**Name:** Sliding driver
**Specification:** 400-1200 mm
**Usage:** side-hung and sliding material

/12

## JS-C430
金刚网传动器

规格：250-600mm
用途：平开型材

**Name:** Diamond network driver
**Specification:** 250-600mm
**Usage:** side-hung material

/10

## JS-C431
外开传动器

规格：400-1400mm
用途：平开型材

**Name:** Swing - out driver
**Specification:** 400-1400mm
**Usage:** side-hung material

/11.5

## JS-C427
单片传动器B

规格：600-1200mm
用途：平开、推拉型材

**Name:** **Single driver** B
**Specification:** 600-1200 mm
**Usage:** side-hung and sliding material

/11.5

## JS-C429
铝塑传动器

规格：600-1200mm
用途：平开型材

**Name:** Aluminum driver
**Specification:** 600-1200mm
**Usage:** side-hung material

/12

## JS-C432
外开传动器

规格：600-1200mm
用途：平开型材

**Name:** Diamond network driver
**Specification:** 600-1200mm
**Usage:** side-hung material

/12

## JS-H5801
标准窗合页68
Standard window hinge 68 /4.2



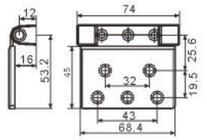


## JS-H5802
多功能合页
Multi-functional hinge /5.5



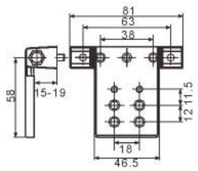


## JS-H5803
加长多功能合页
Lengthened multi-functional hinge /6



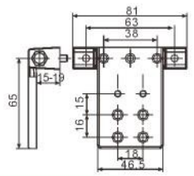


## JS-H5804
隐藏式合页
Covered hinge /4.2



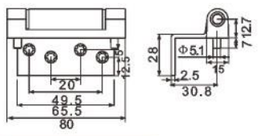


## JS-H5805
加长大门合页(塑盖)
Lengthened door hinge (plastic civer) /18



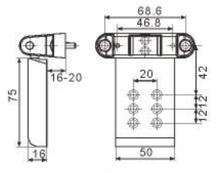


## JS-H5806
平板门合页266
Plate door hinge 266 /5.5



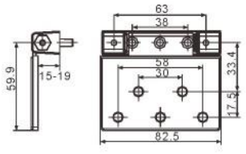


## JS-H5807
单点锁
Single-point lock /6



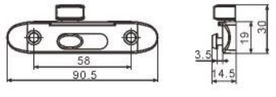


## JS-H5808
新三维大门合页
New-three-dimensional door hinge /22

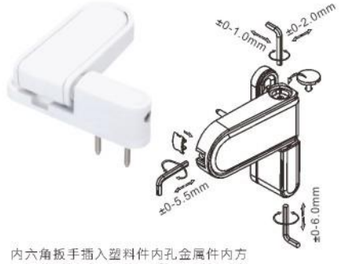


内六角扳手插入塑料件内孔金属件内方可调节（扳手可调节360°）否则扳手会自转!
Adjust by inserting the inner hexagon spanner (the maximum is 360°) into the metalwork in the inner hole of plastic part,other wise,the spanner will turn it self.

## JS-H5809
平面合页
Plane hinge /6



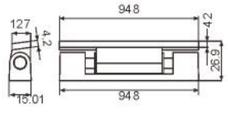






## JS-A3602
角部铰链（上、下）镀白(9系)
bottom clamp(up and down) white ( 9 series) /17




## JS-B3606
角部铰链（上、中、下）镀黄(13系)
bottom clamp (up,middle and down) yellow (13 series) /25






中内扣
MIDDLE LATCH



打孔扣模
PUNCTURING AND STICKING









## JS–ZN001 电动开窗器
Electric window regulator /470



链条式开窗器>
Chain type window regulator /470

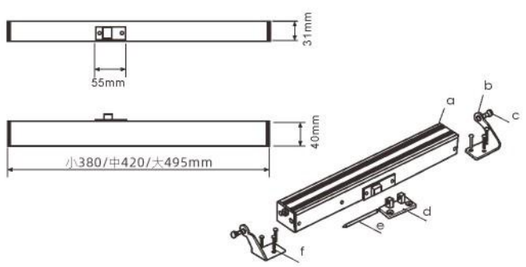


特点
1.精巧的外形设计。
2.超负荷过载保护。
3.用于排烟、排热的电动推拉窗。
4.大于10000次推出与拉测试。

CHARACTER:
1.Elaborate configuration design
2.Overload protection
3.Electric push-pull window for smoke and heat removal
4.Over 10000 push and pull testing

**应用范围及安装**
电动链条开窗机广泛应用于：上悬窗、下悬窗、中悬窗、天窗和平开窗等。
安装灵活，根据有没有窗台的情况，配合固定码不同的安装方式。

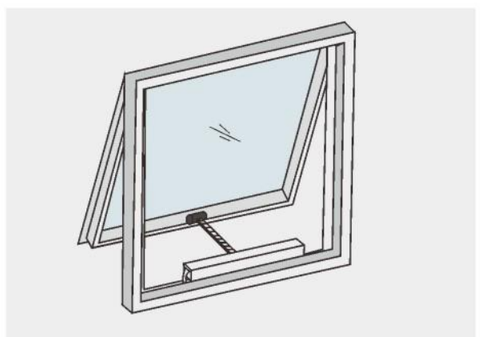

上悬开外窗上的安装
Upper suspension & external open window's installation

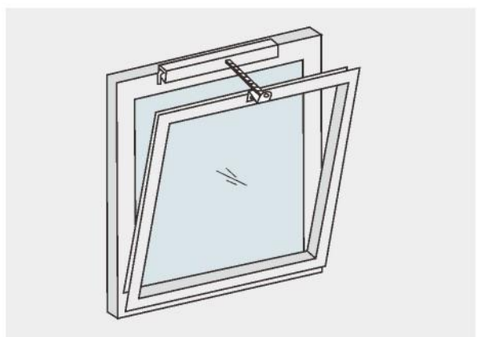

下悬内倒窗上的安装
Lower suspension & internal open window's installation





## JS–ZN002 雨水感应开窗器
Rainwater sensing window opener /550



链条式雨感开窗器(500mm长)>
Chain type rainwater sensing window opener /550

## JS–ZN003 电动开窗器
Electric window regulator /1100



双链条式开窗器>
Double chain type window opener /1150



遥控器>
Remote controller /70



墙壁开关>
Window switch /85

特点
1.精巧的外形设计。
2.超负荷过载保护。
3.用于排烟、排热的电动推拉窗。
4.大于10000次推出与拉测试。

CHARACTER:
1.Elaborate configuration design
2.Overload protection
3.Electric push-pull window for smoke and heat removal
4.Over 10000 push and pull testing

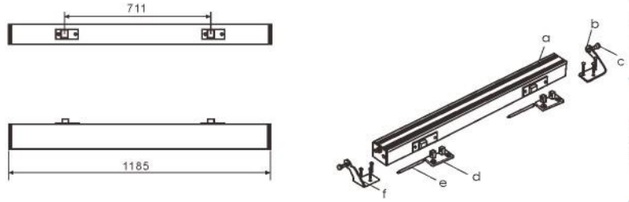


配件说明
A:电动链条式开窗器　D:链条固定架
B:安装支架　E:链条固定插销
C:六角螺钉　F:Ø5圆头自攻螺钉

ACCESSORIES:
A:Elecric chain motor　D:Chain fix holde
B:Braket　E:Pin
C:Hexagonal head screw　F:Ø5 self tapping screw

**应用范围及安装**
电动链条开窗机广泛应用于：上悬窗、下悬窗、中悬窗、天窗和平开窗等。
安装灵活，根据有没有窗台的情况，配合固定码不同的安装方式。

APPLICATION RANGE AND INSTALLATION:
The electric window machine is widely applied to: top-hung window, lower-hung window, middle-hung window, dormant window and side hung window

Flexible installation, select different installation manners according to windowsill condition

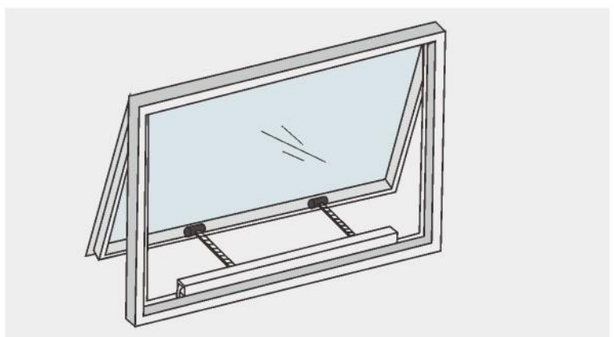

上悬开外窗上的安装
Upper suspension & external open window's installation



消防联动控制箱
Fire fighting control box /240V:4000